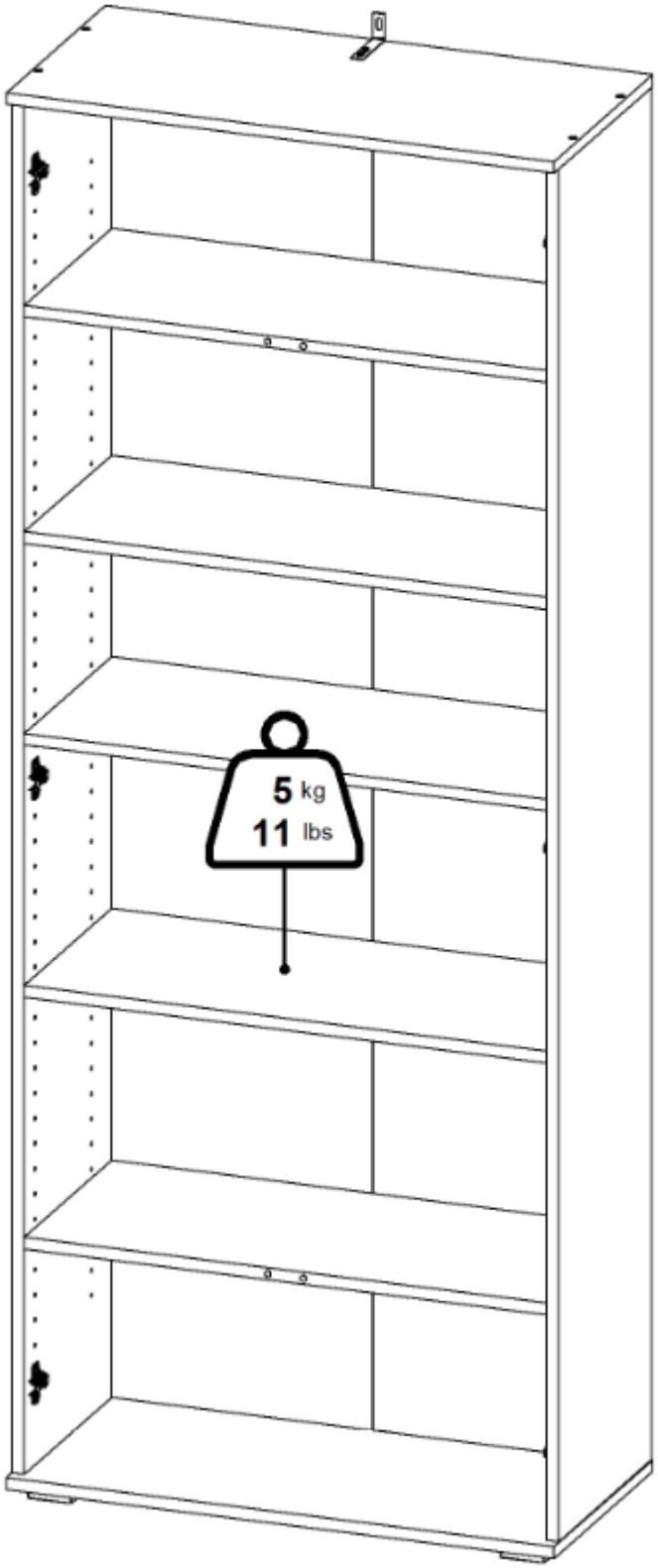
5 kg
11 lbs

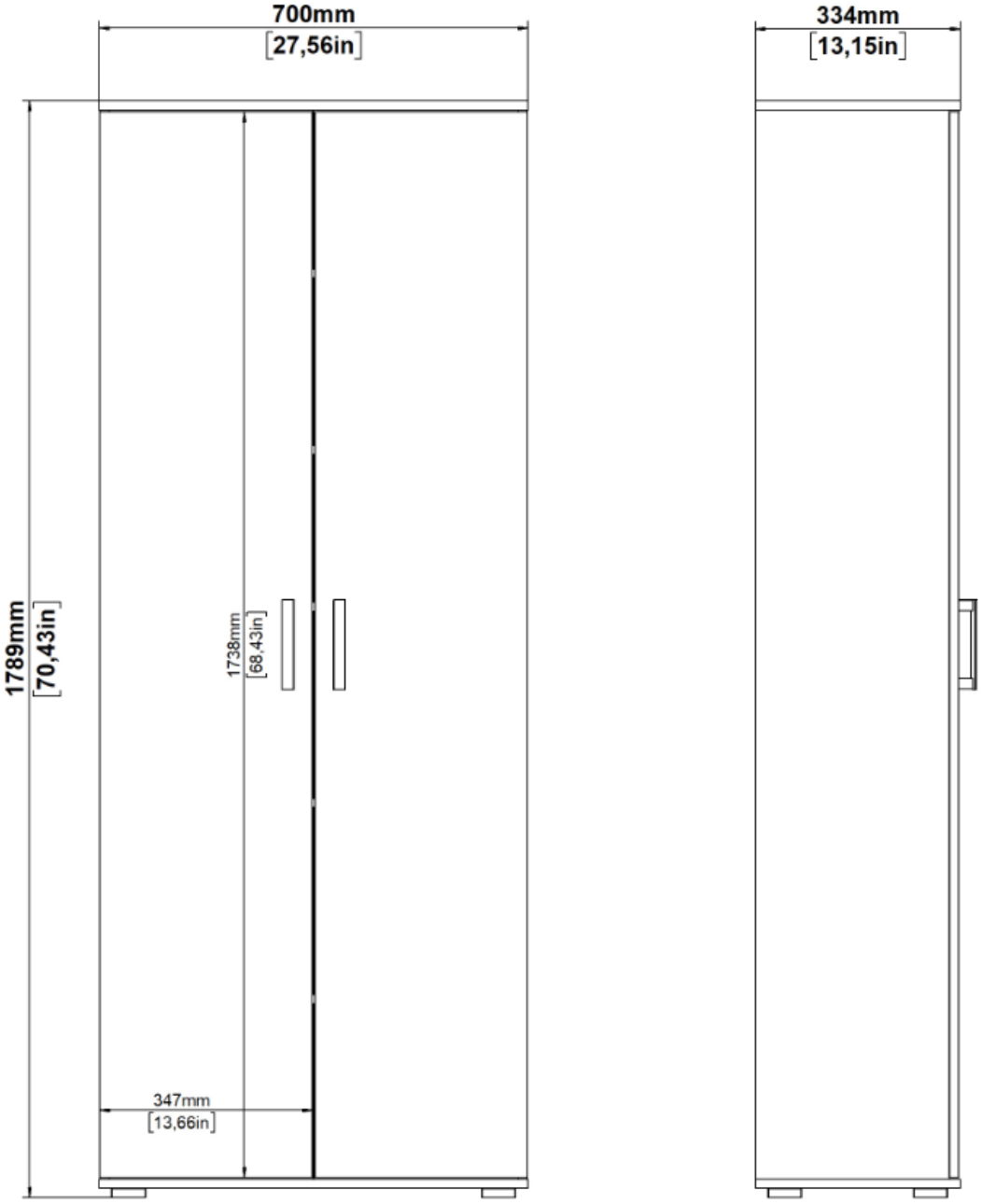
700mm
[27,56in]
334mm
[13,15in]
1789mm
[70,43in]
1738mm
[68,43in]
347mm
[13,66in]

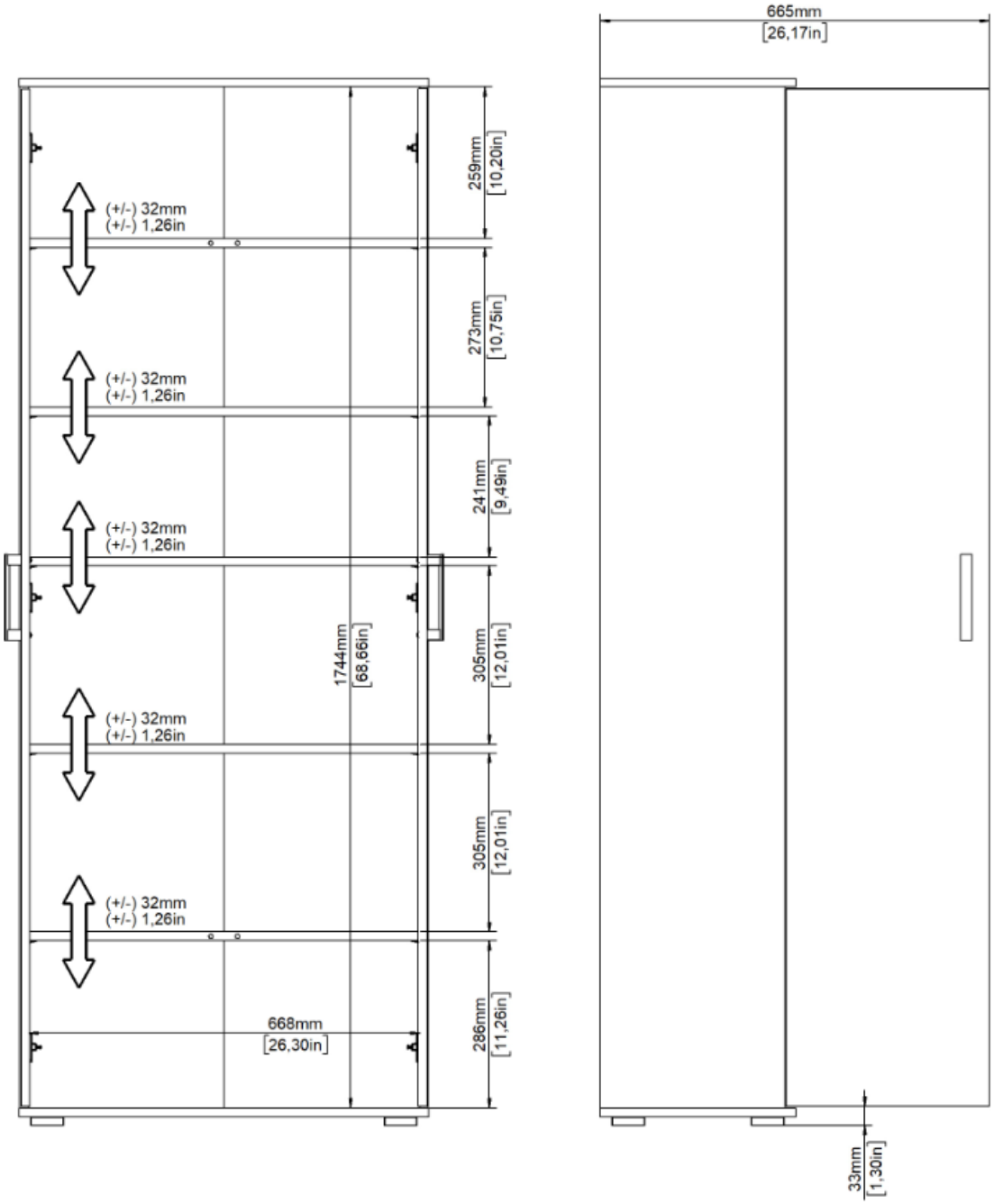
(+/-) 32mm
(+/-) 1,26in
(+/-) 32mm
(+/-) 1,26in
(+/-) 32mm
(+/-) 1,26in
(+/-) 32mm
(+/-) 1,26in
(+/-) 32mm
(+/-) 1,26in
259mm
[10,20in]
273mm
[10,75in]
241mm
[9,49in]
305mm
[12,01in]
305mm
[12,01in]
286mm
[11,26in]
1744mm
[68,66in]
668mm
[26,30in]
665mm
[26,17in]
33mm
[1,30in]