LT6234K63004

MIX
Wood from responsible sources
FSC® C011298

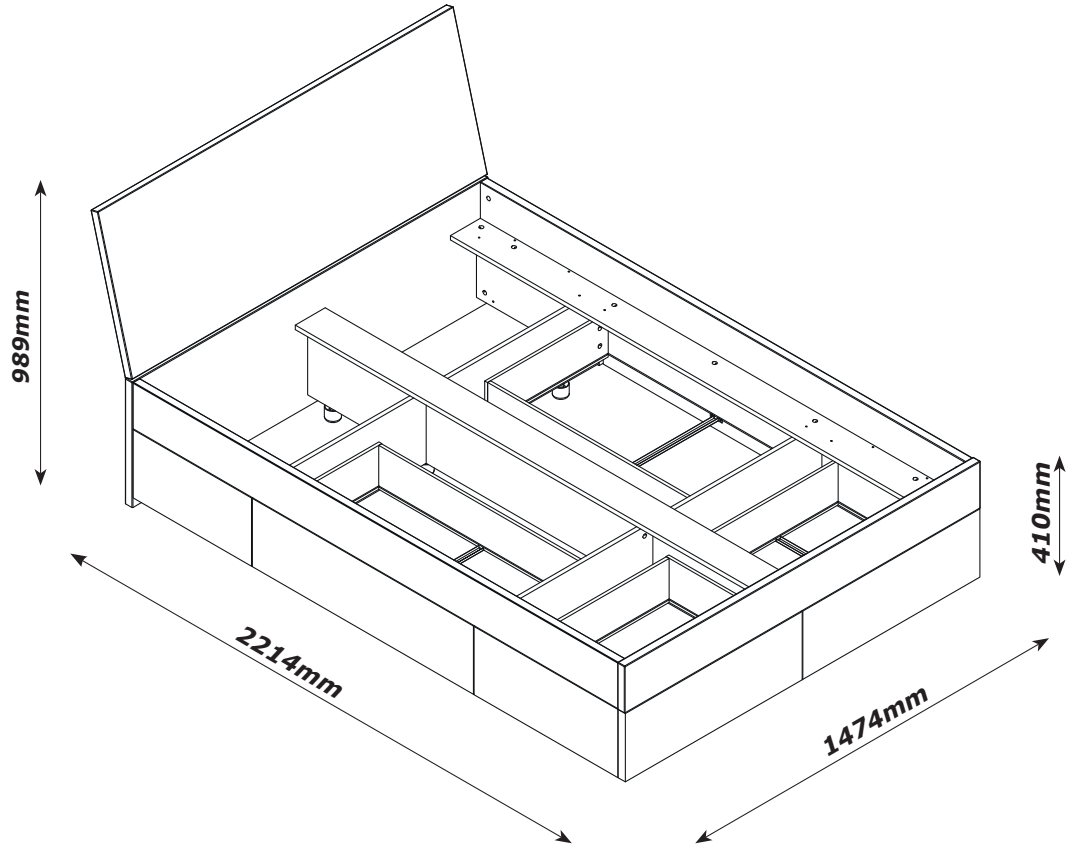

QF4960-1

composad

GRUPPO MAURO SAVIOLA
The Eco-Ethical Company

GUARANTEED ECOLOGICAL PANEL 100% RECYCLED WOOD

MADE IN ITALY

Produced by COMPOSAD srl, Via Lombardia 29, 46019 Viadana (MN) ITALY

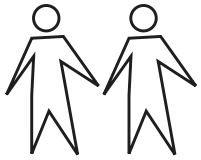

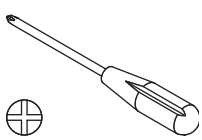

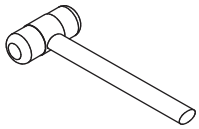

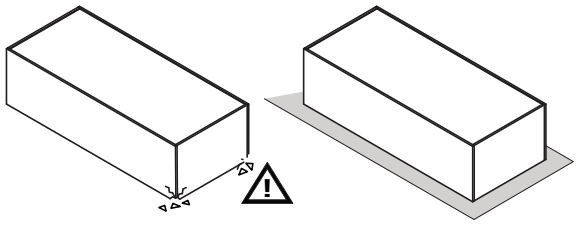

BU4121

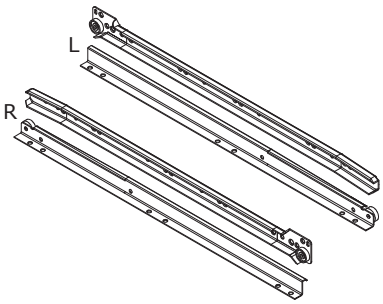

A21
x4

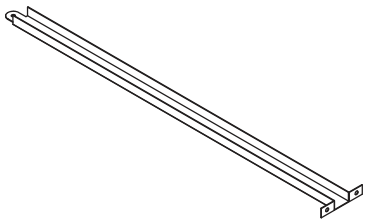

W467
x4

BU4093

V13
x28

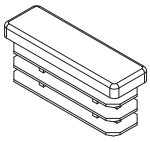

P3
x3

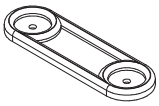

P16
x3

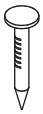

H15
x6

V98
x12

V5
x16

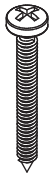

V145
x32

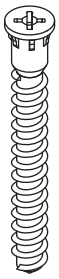

V57
x3

T28
x51

T104
x6

V130
x16

T103
x12

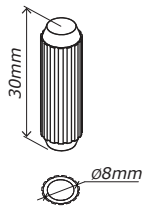

H1
x48

T7
x43

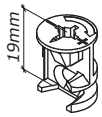

T97
x4

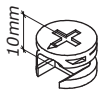

T98
x16

H54
x16

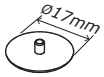

G136
x16

CF0144

W240
x2

BU4120

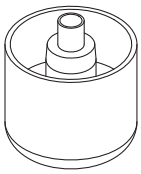

P69
x10

W240
x1

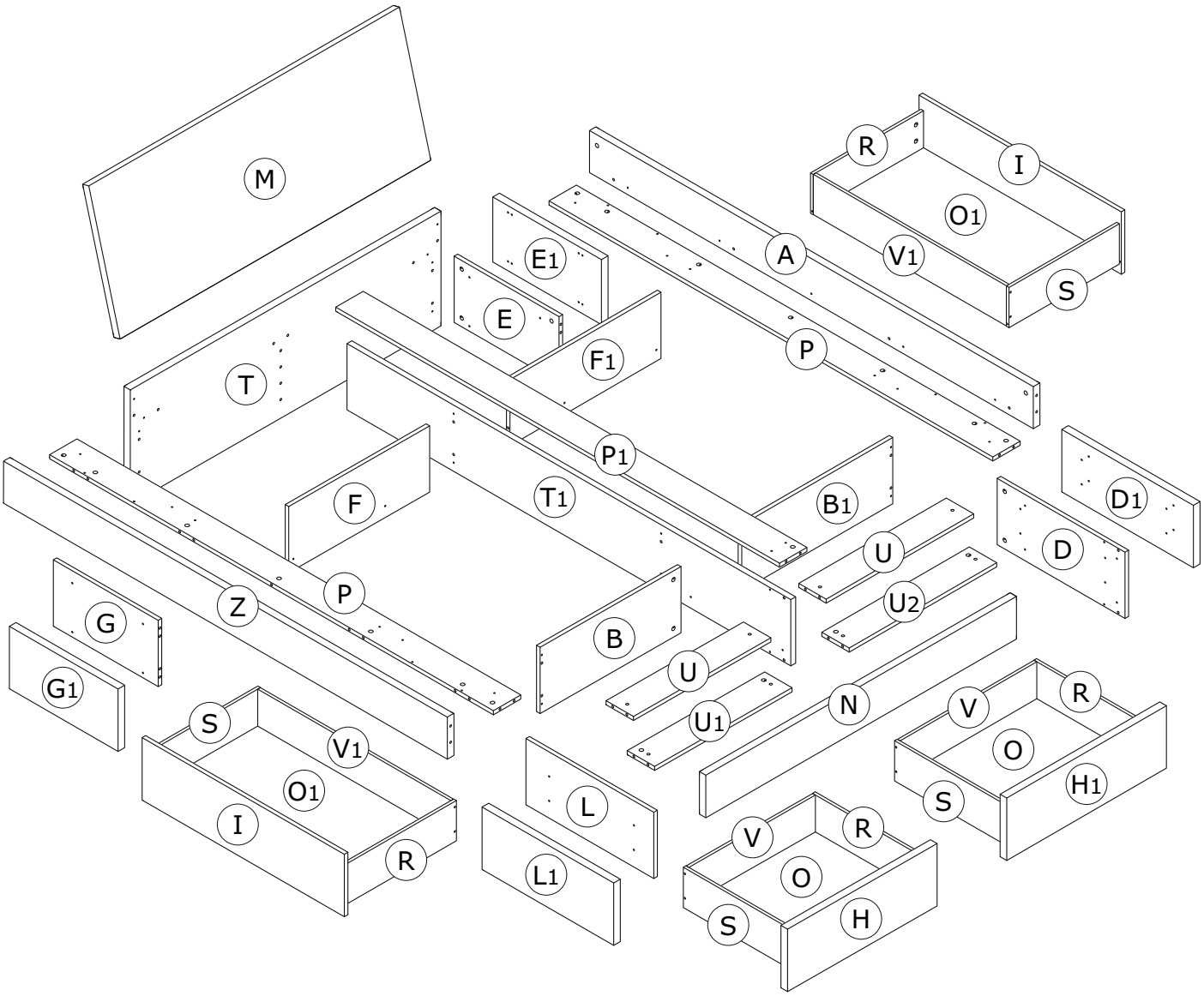
M
R
I
O1
V1
S
A
E1
E
F1
P
T
P1
T1
B1
D1
D
F
U
U2
G
Z
P
B
G1
U
U1
N
V
R
O
H1
S
S
V1
O1
I
R
L
L1
V
R
O
S
H

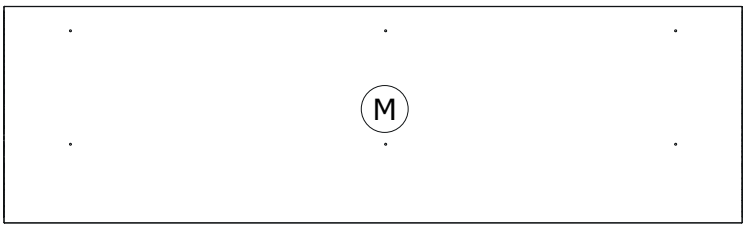

TE0514
1474x550x30mm

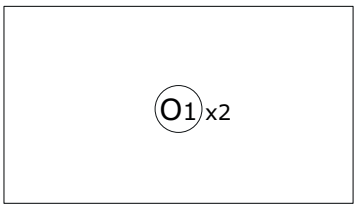

SH3247
886x500x2mm

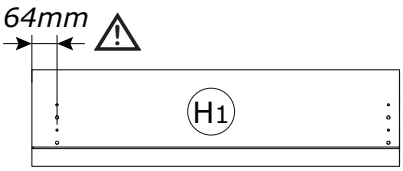

CS3206
733x245x30mm

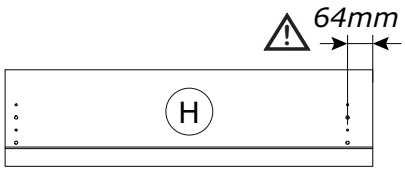

CS3207
733x245x30mm

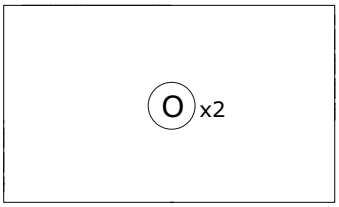

SH3249
640x500x2mm

BOX 1/4

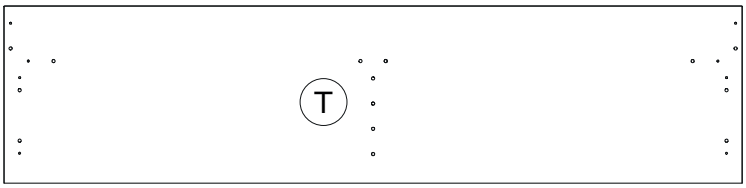

TE0513
1474x450x30mm

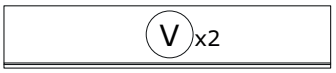

OS0275
629x158x12mm

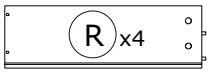

OS0273
500x158x12mm

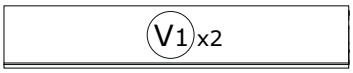

OS0272
875x158x12mm

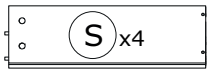

OS0274
500x158x12mm

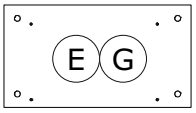

FS3328
475x260x16mm

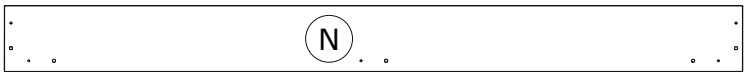

PE0259
1474x167x30mm

BOX 2/4

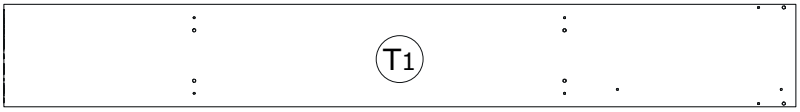

FS3337
2010x260x22mm

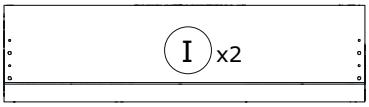

CS3197
916x245x16mm

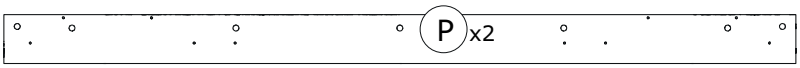

FS3336
2010x124x16mm

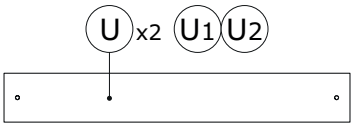

FS3342
678x124x16mm

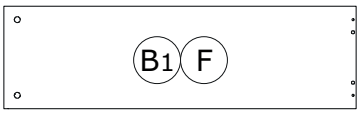

FS3344
694x260x16mm

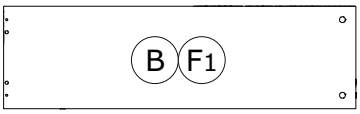

FS3345
694x260x16mm

BOX 3/4

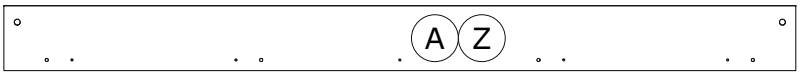

SP0461
2010x165x30mm

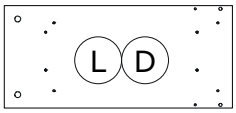

FS3329
579x260x16mm

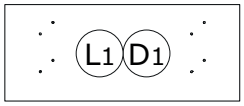

CS3202
596x245x30mm

CS3204
492x245x30mm

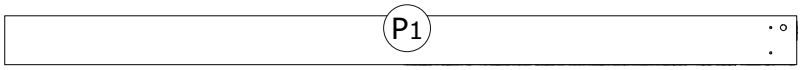

FS3330
2010x124x16mm

BOX 4/4

1

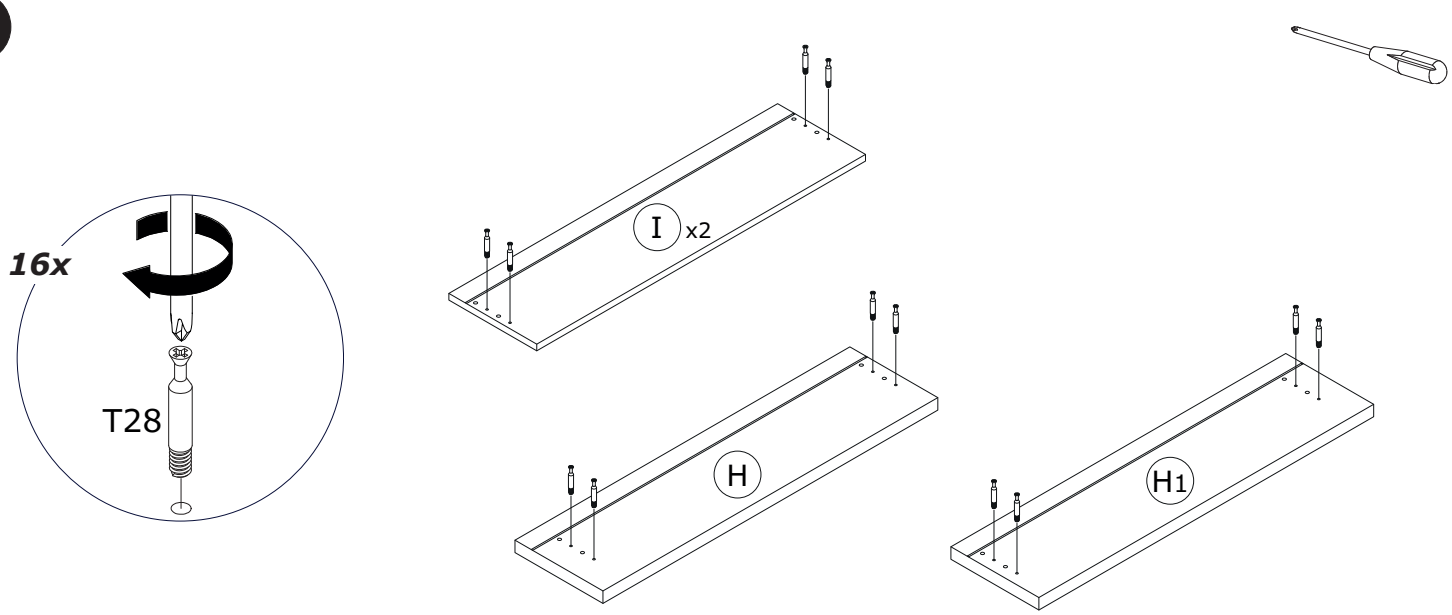
16x
T28
I
x2
H
H1

2

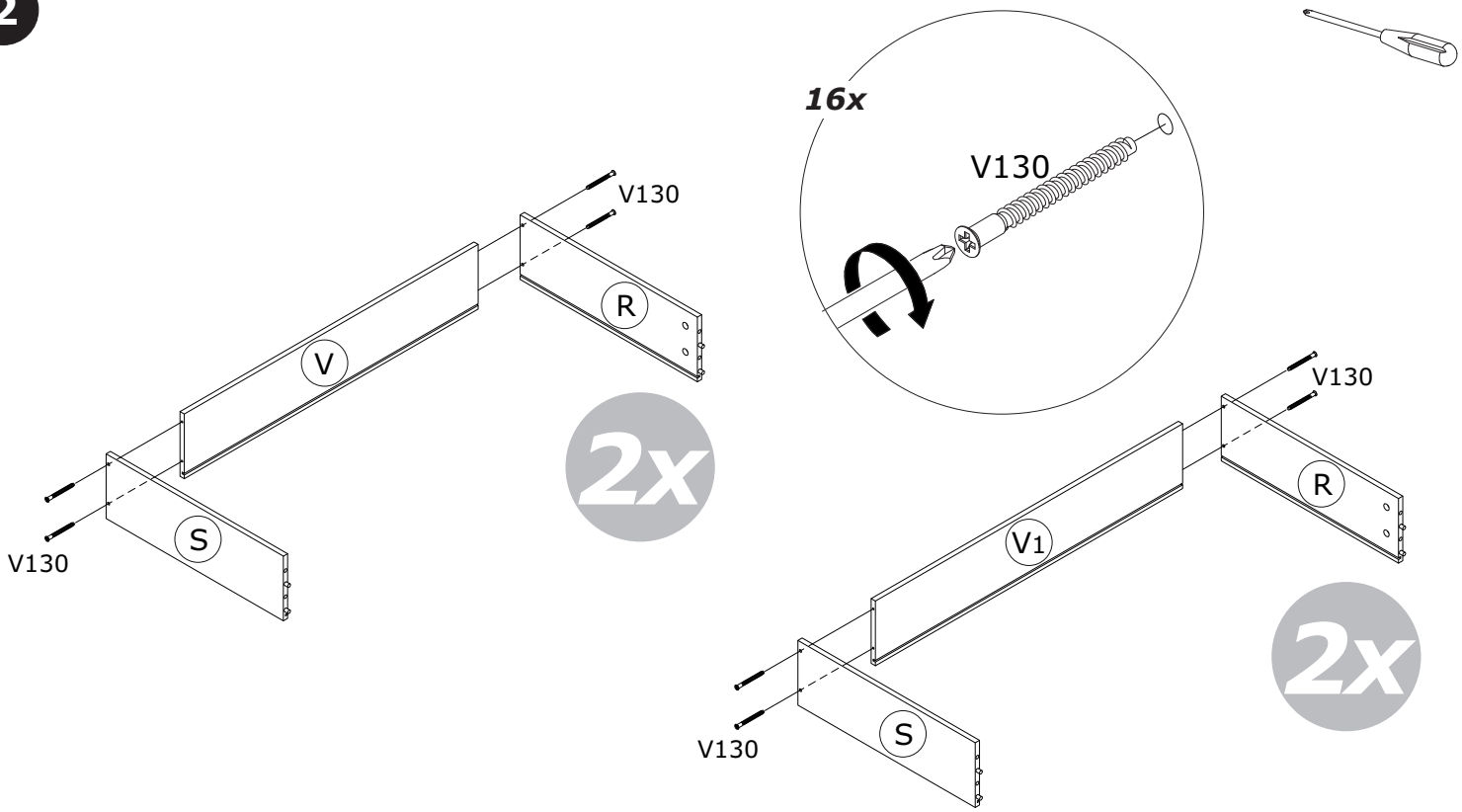
16x
V130
V
R
S
V130
2x
V130
V1
R
S
V130
2x

3

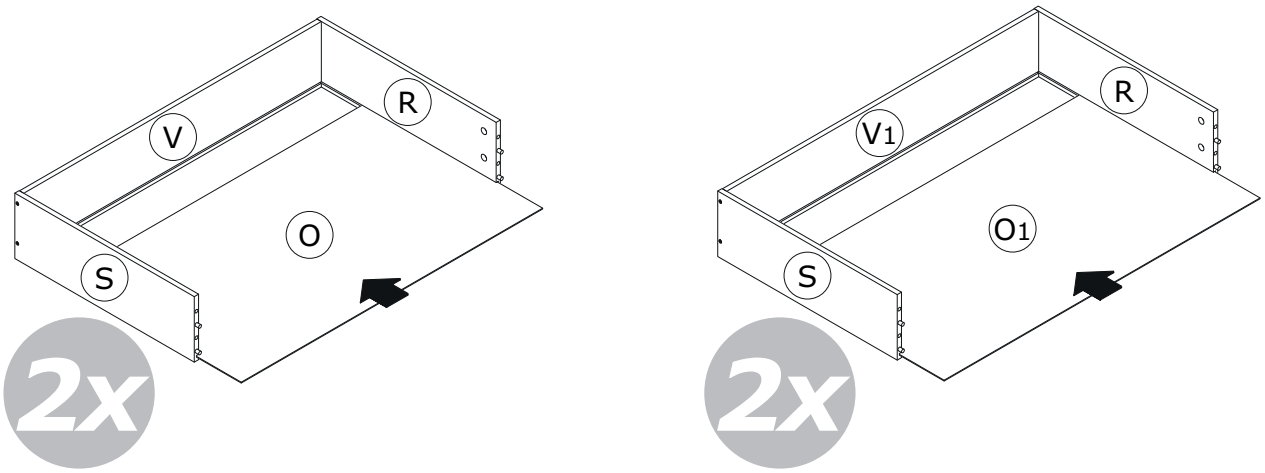
V
R
O
S
2x
V1
R
O1
S
2x

4

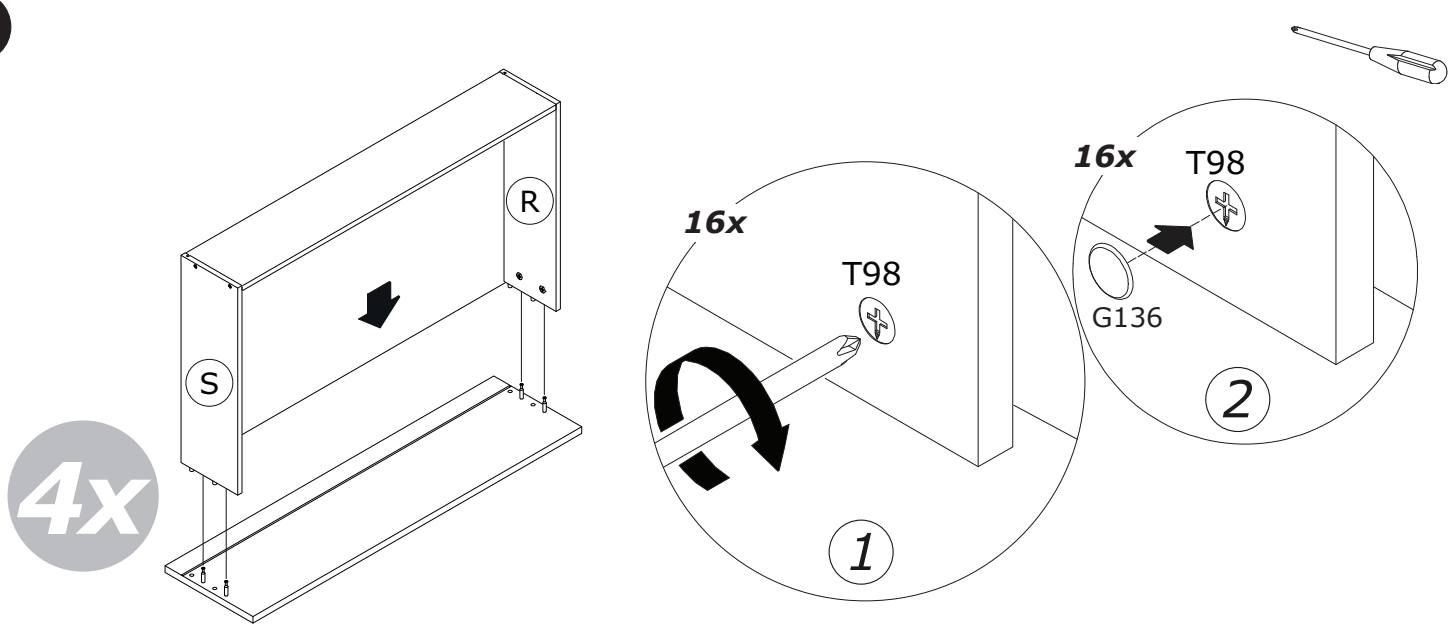
R
S
4x
16x
T98
1
16x
T98
G136
2

5

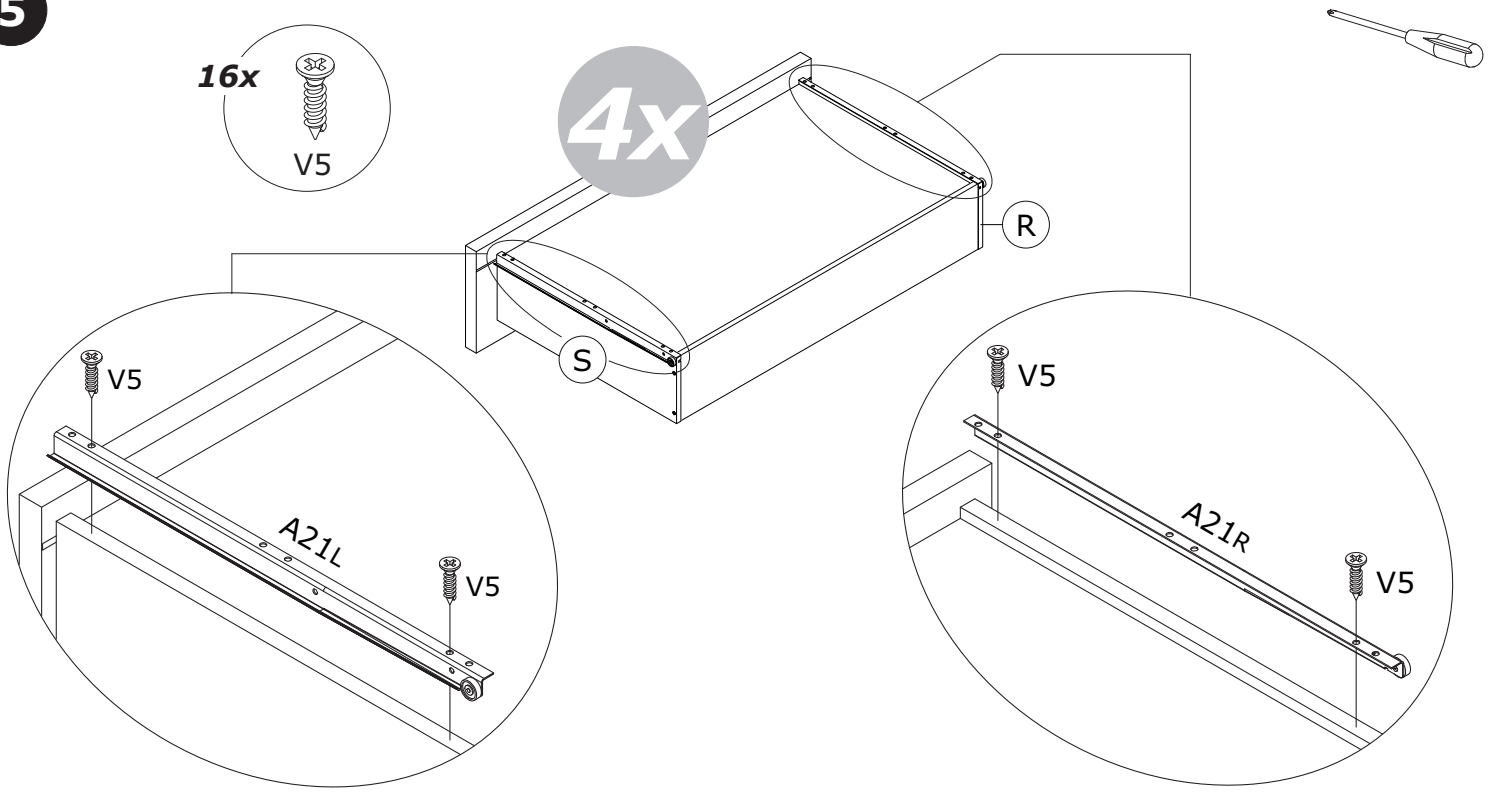
16x
V5
4x
R
S
V5
A21L
V5
V5
A21R
V5

6

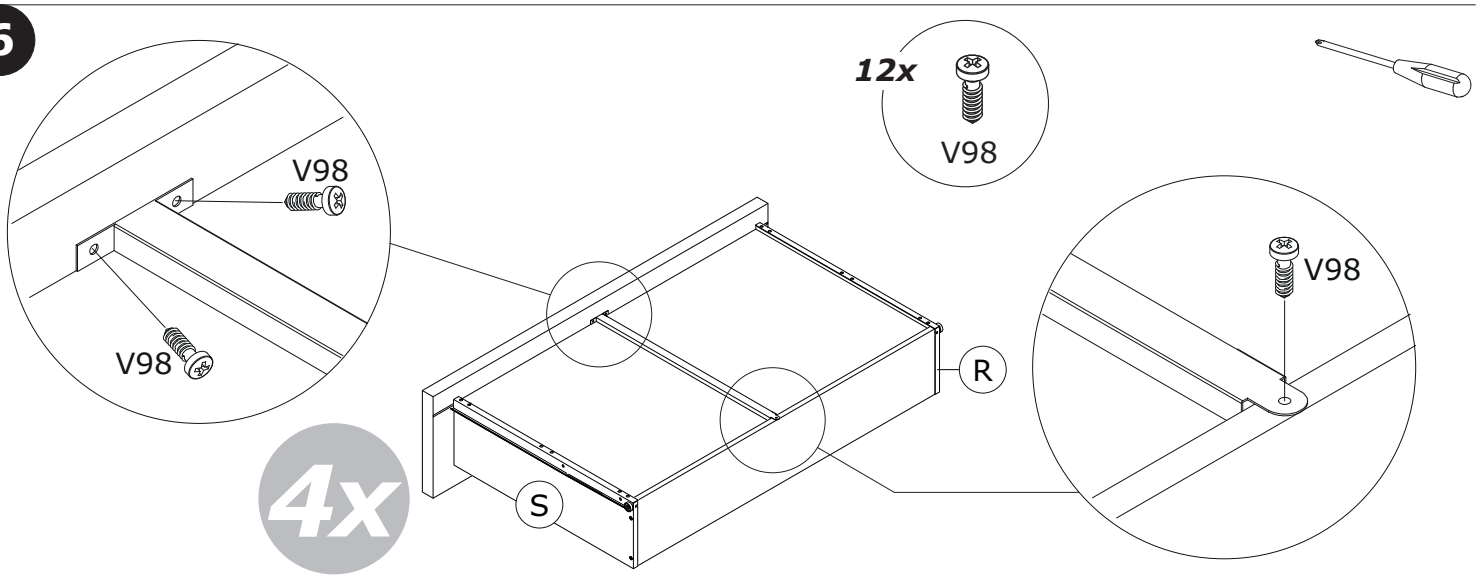
12x
V98
V98
V98
4x
R
S
V98

7

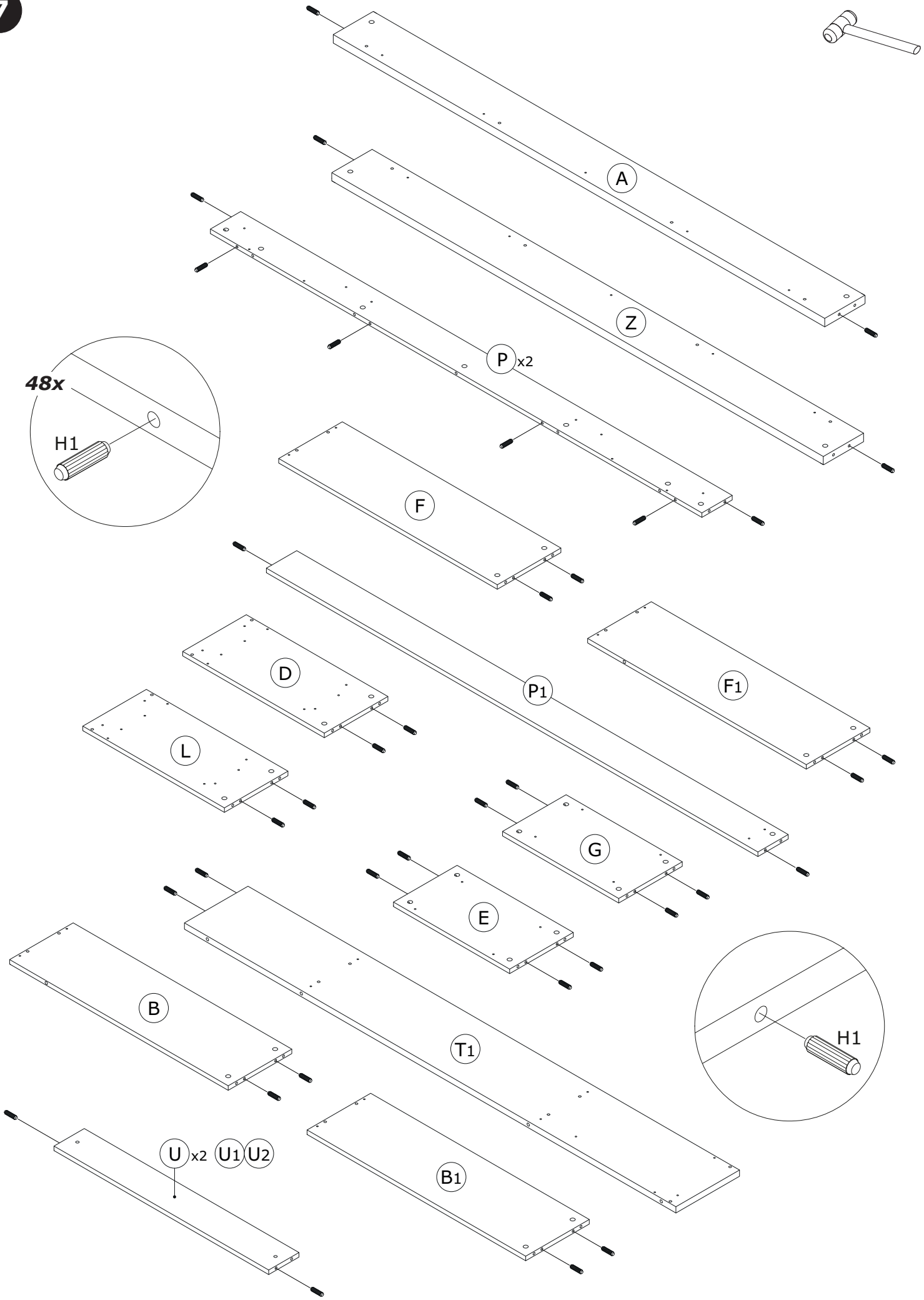

8

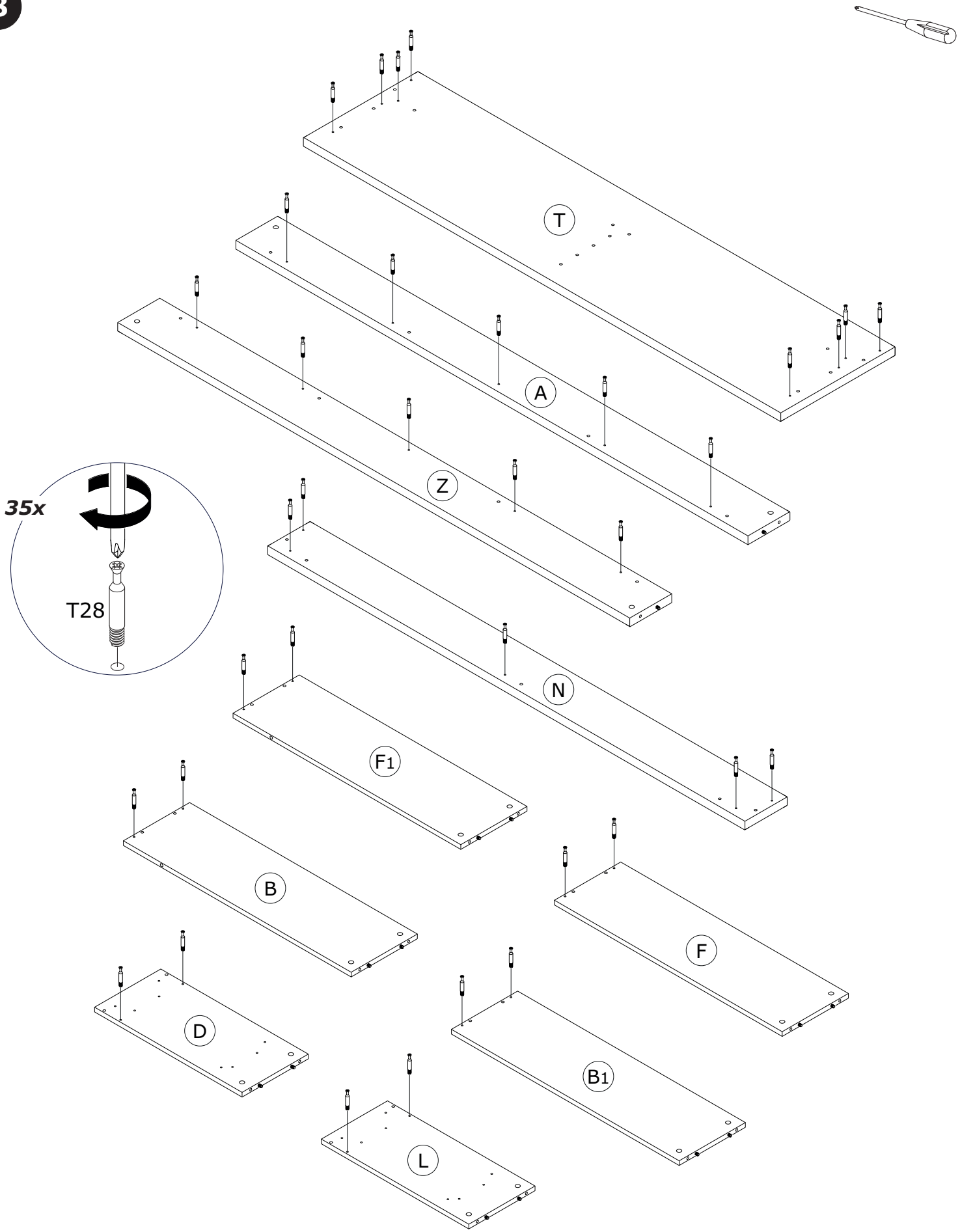

9

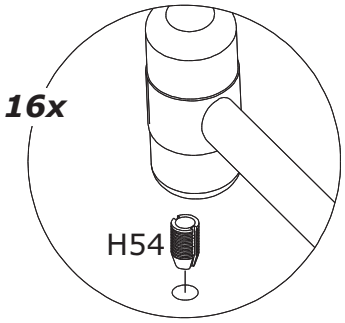
16x
H54

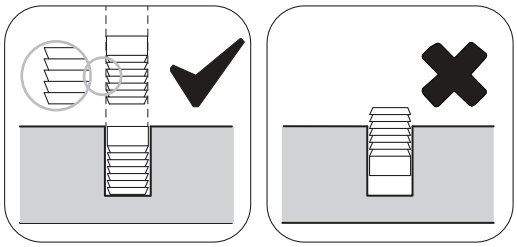

G1
86mm
86mm
E1
69mm
103mm

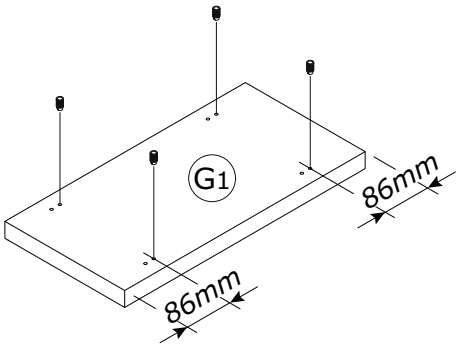
G1
86mm
86mm

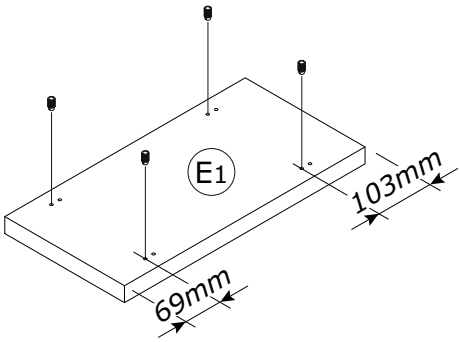
E1
103mm
69mm

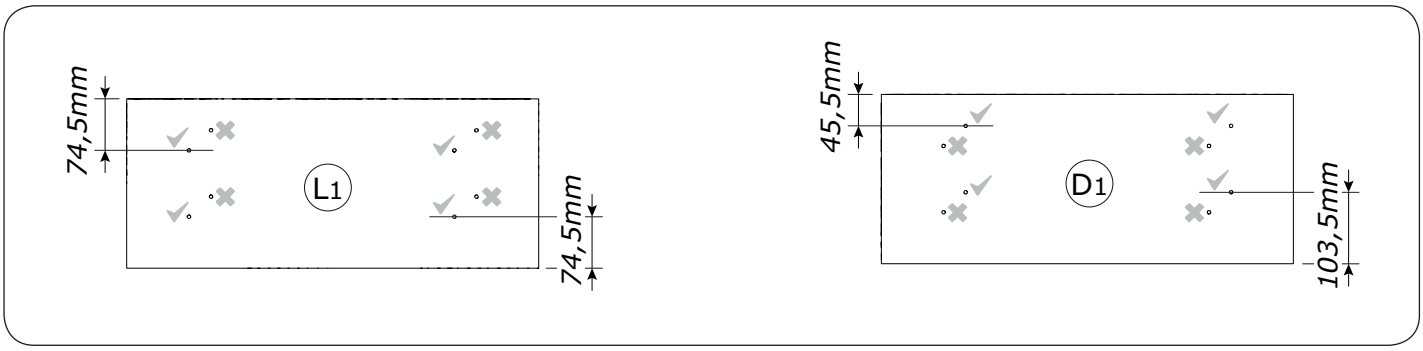
74,5mm
L1
74,5mm
45,5mm
D1
103,5mm

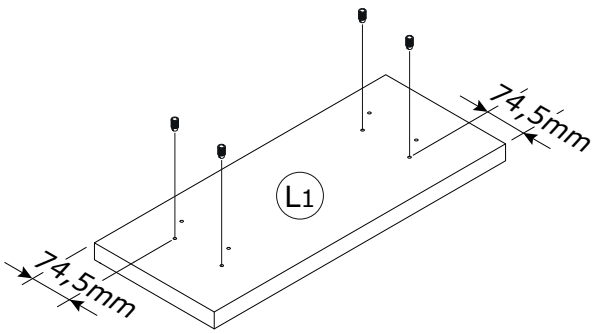
L1
74,5mm
74,5mm

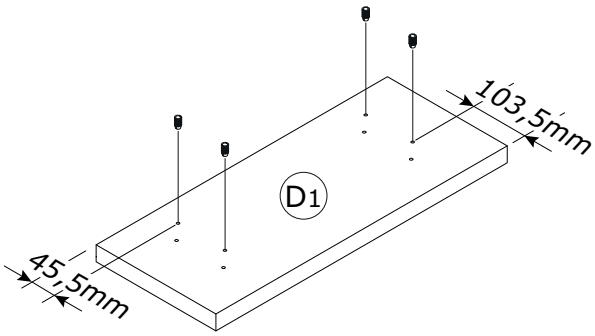
D1
103,5mm
45,5mm

10 a

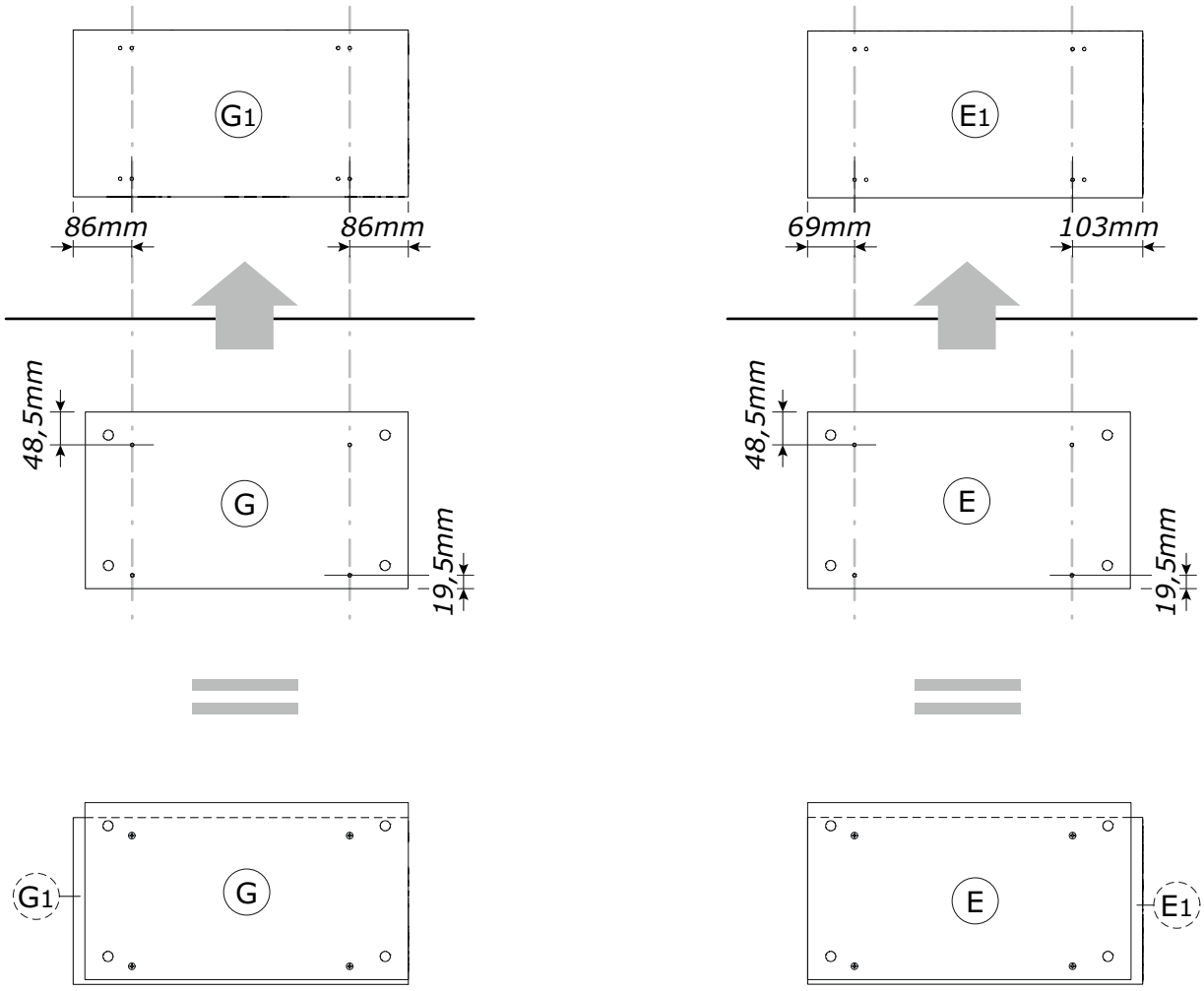
G1
86mm
86mm
48,5mm
G
19,5mm
G1
G
E1
69mm
103mm
48,5mm
E
19,5mm
E
E1

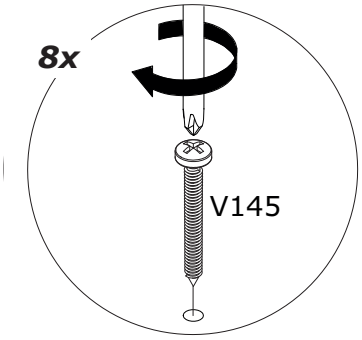
8x
V145

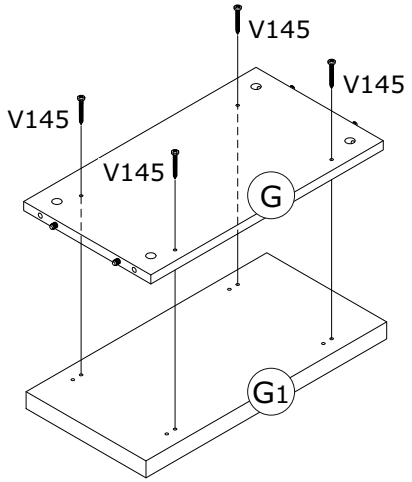
V145
V145
V145
V145
G
G1

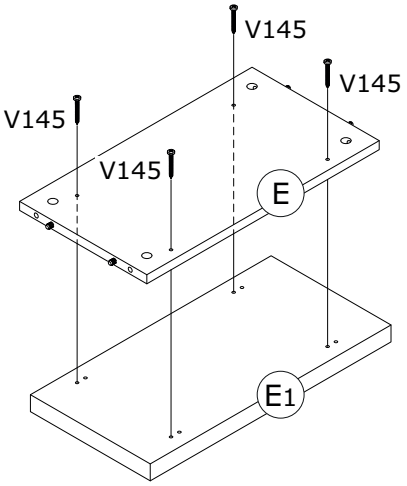
V145
V145
V145
V145
E
E1

10 b

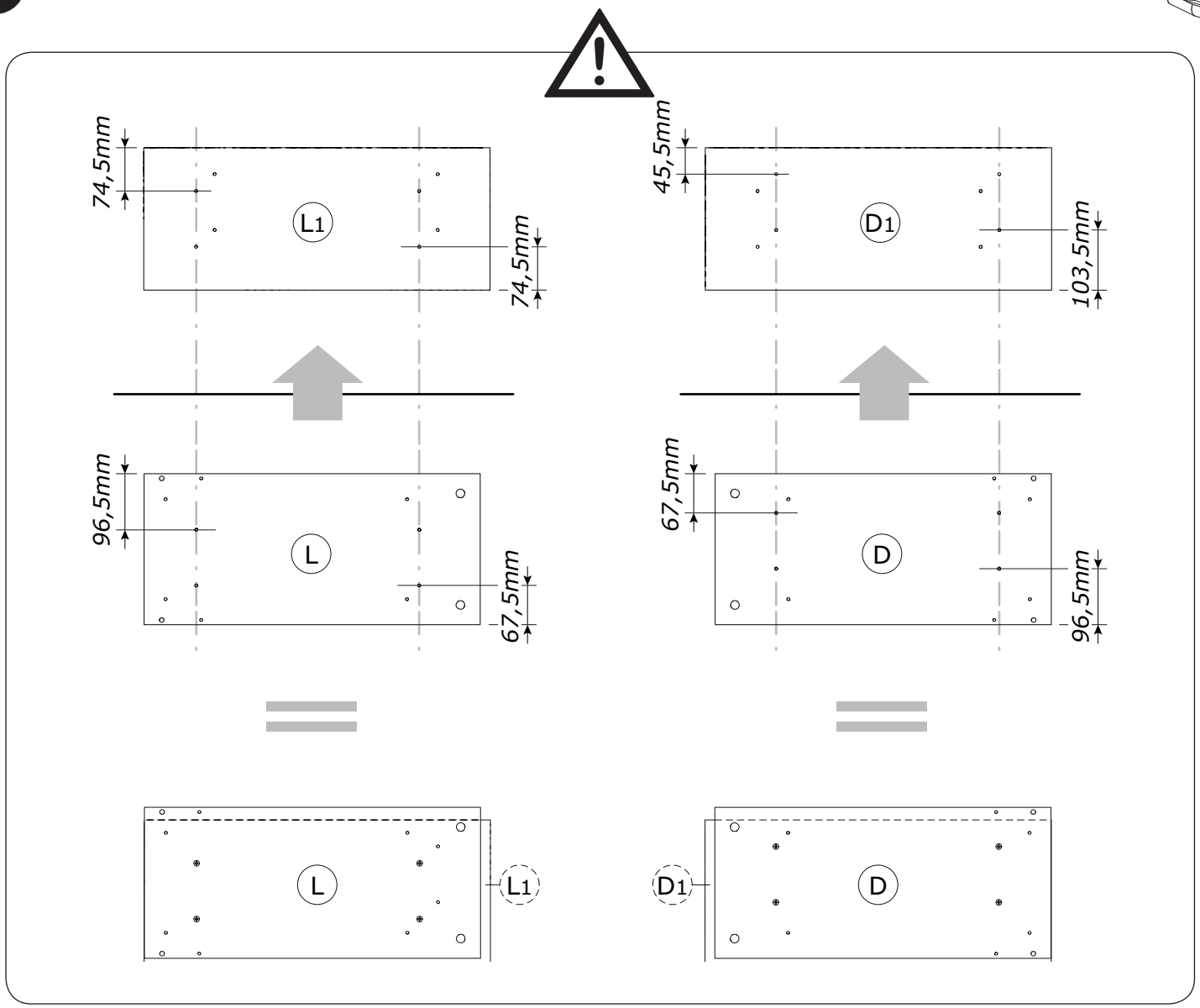
74,5mm
L1
74,5mm
45,5mm
D1
103,5mm
96,5mm
L
67,5mm
67,5mm
D
96,5mm
L
L1
D1
D

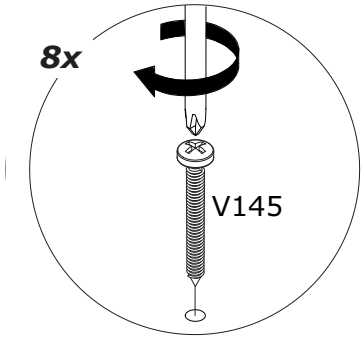
8x
V145

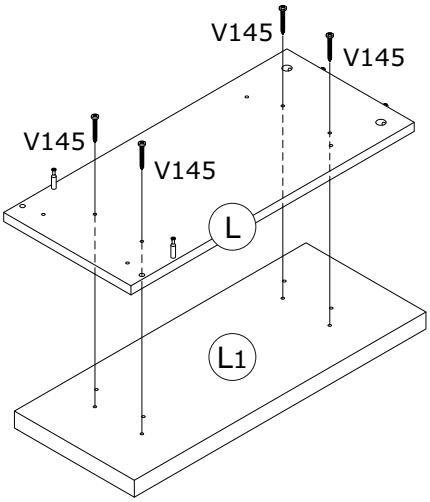
V145
V145
V145
V145
L
L1

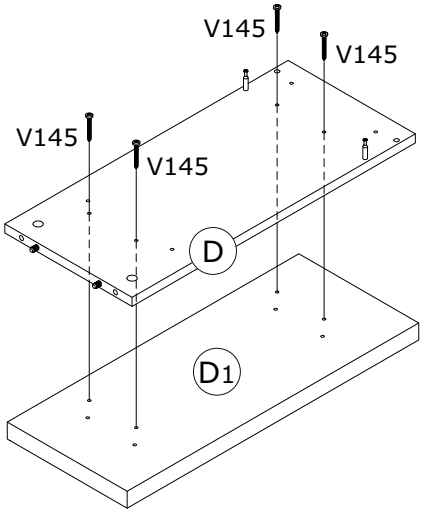
V145
V145
V145
V145
D
D1

11

8x P69

T1

F

B

F1

B1

U2

U1

2x P69

12

6x H15

T

3x

H15

P16

H15

13

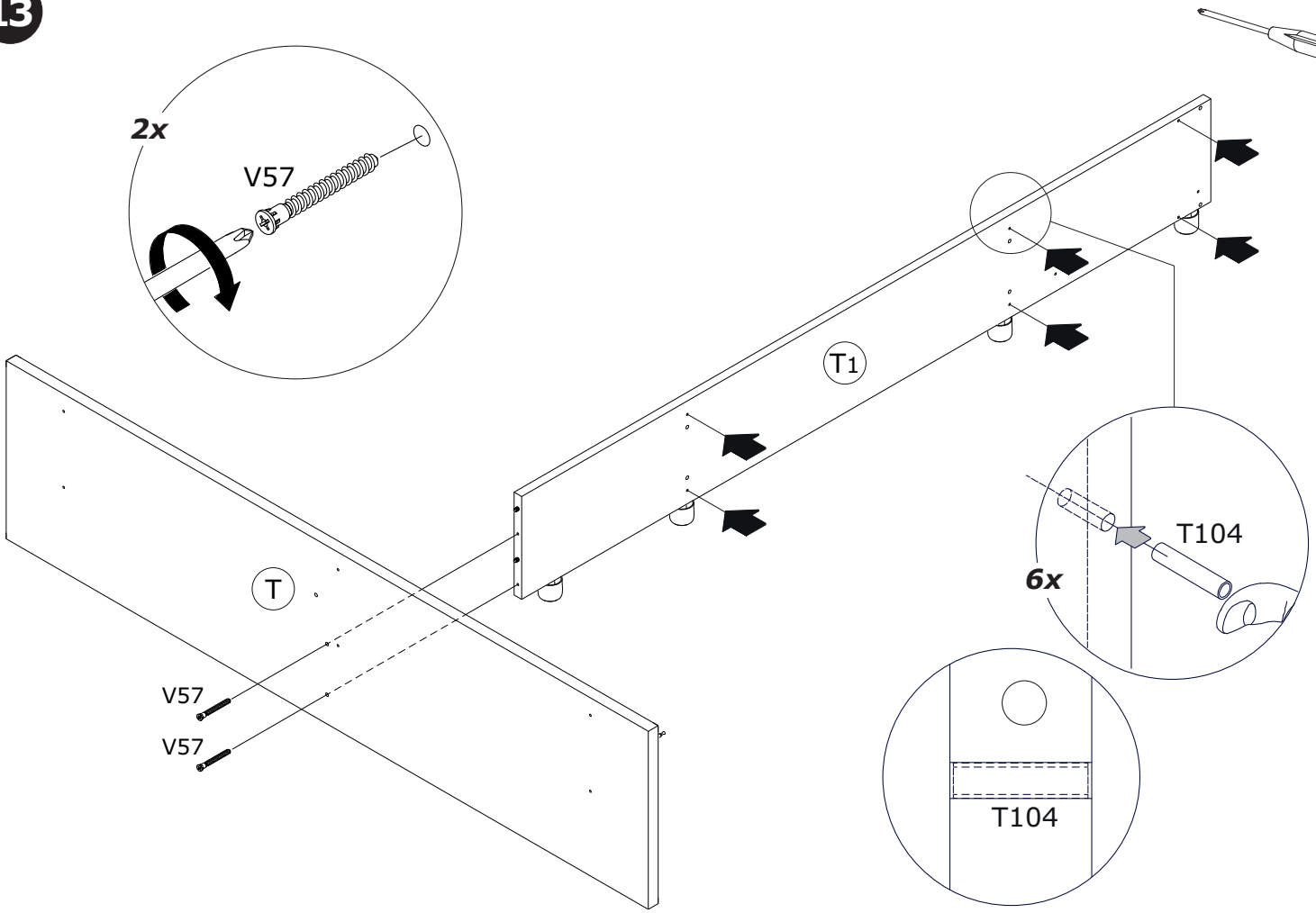
2x
V57
T1
T
V57
V57
T104
6x
T104

14

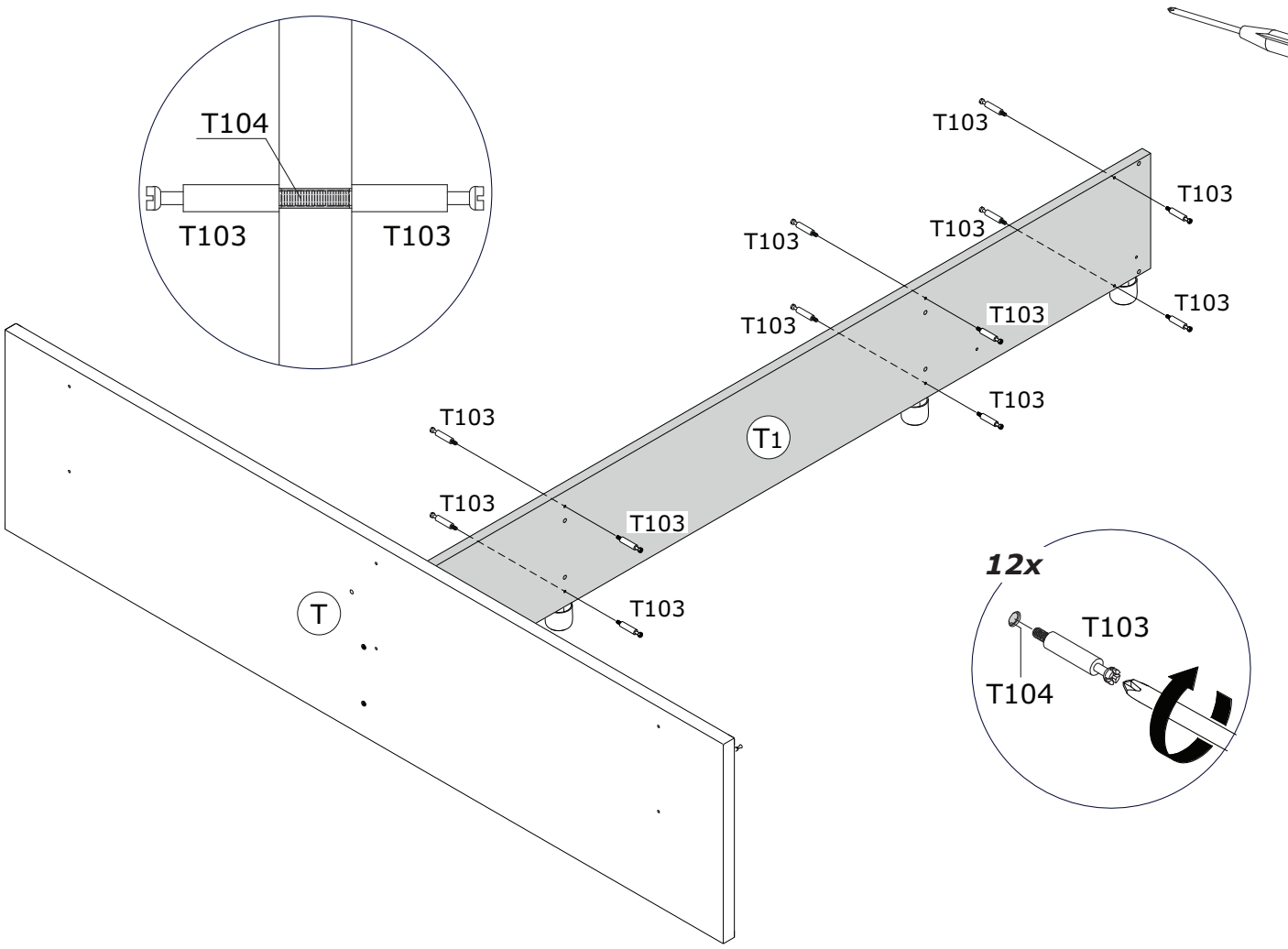
T104
T103
T103
T103
T103
T103
T103
T103
T103
T103
T103
T103
T103
T1
T
12x
T103
T104

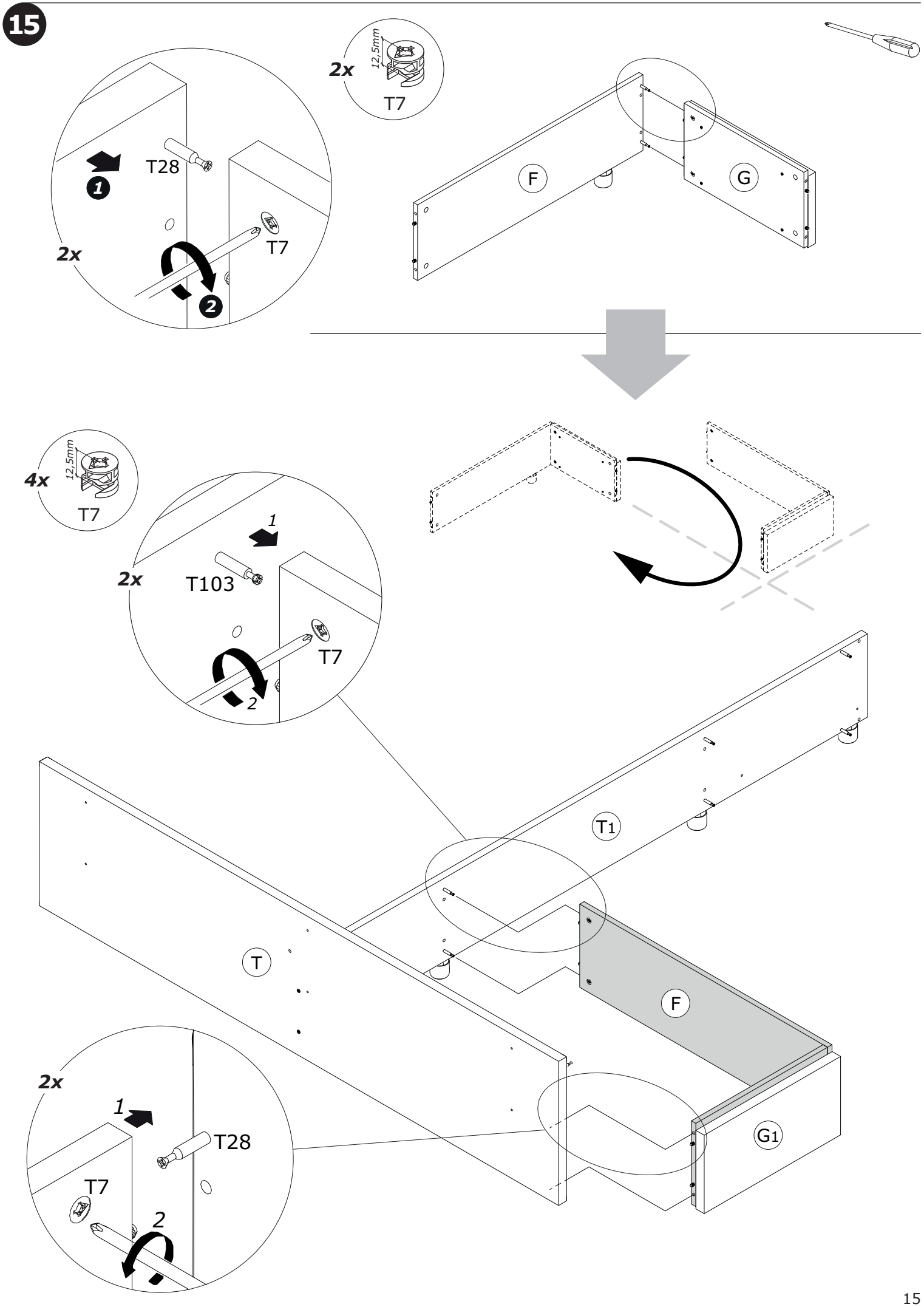
15
2x
12,5mm
T7
T28
1
2x
T7
2
F
G
4x
12,5mm
T7
1
2x
T103
T7
2
T1
T
F
2x
1
T28
T7
2
G1

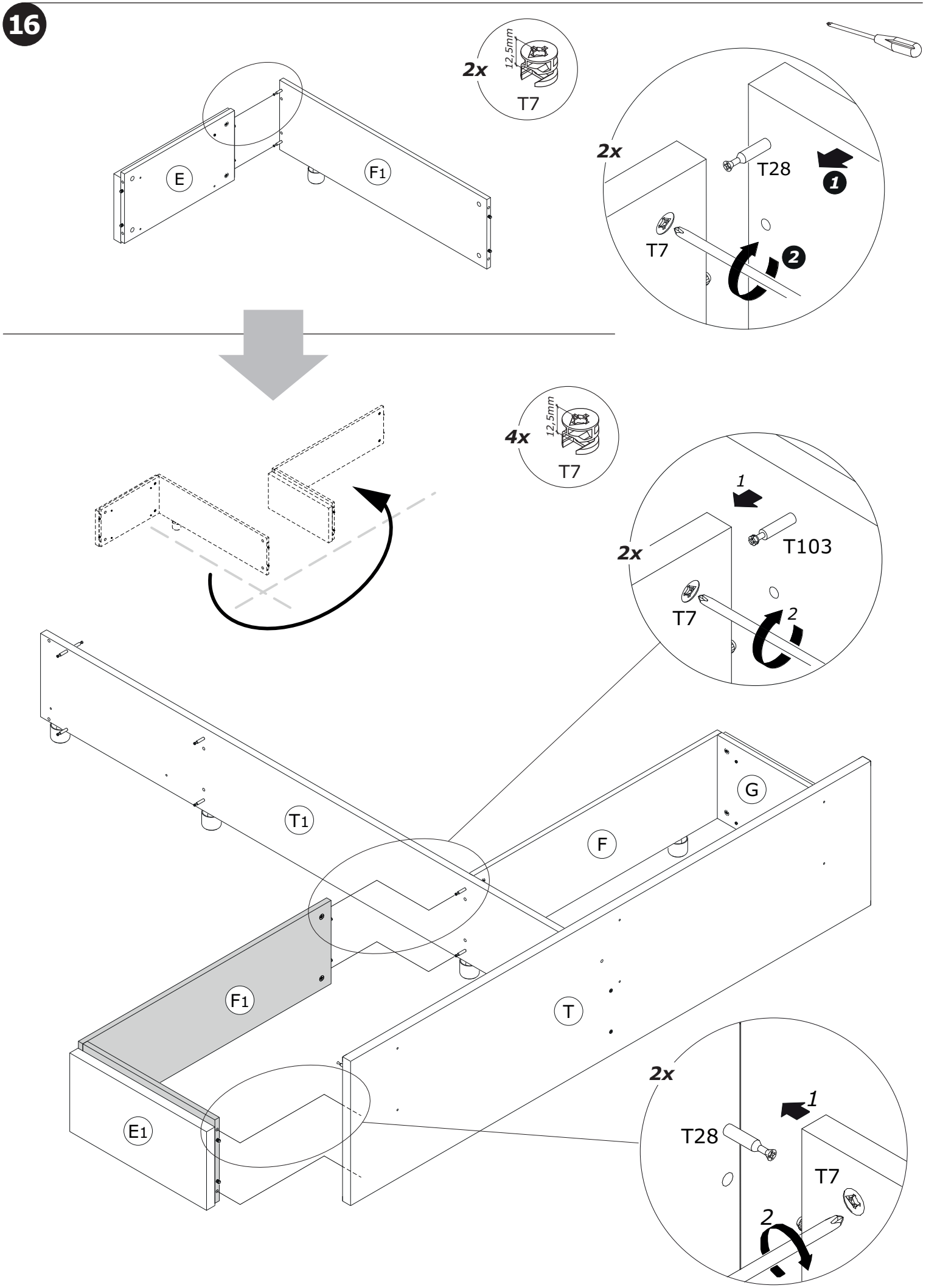
16
2x
12,5mm
T7
E
F1
2x
T28
1
T7
2
4x
12,5mm
T7
1
2x
T103
T7
2
T1
G
F
F1
T
E1
2x
1
T28
T7
2

17

2x

12,5mm

T7

T

E

F1

F

G1

T1

U

U1

T7

1

2

T103

T103

2

1

T7

18

L

B

2x

T28

1

T7

2

19

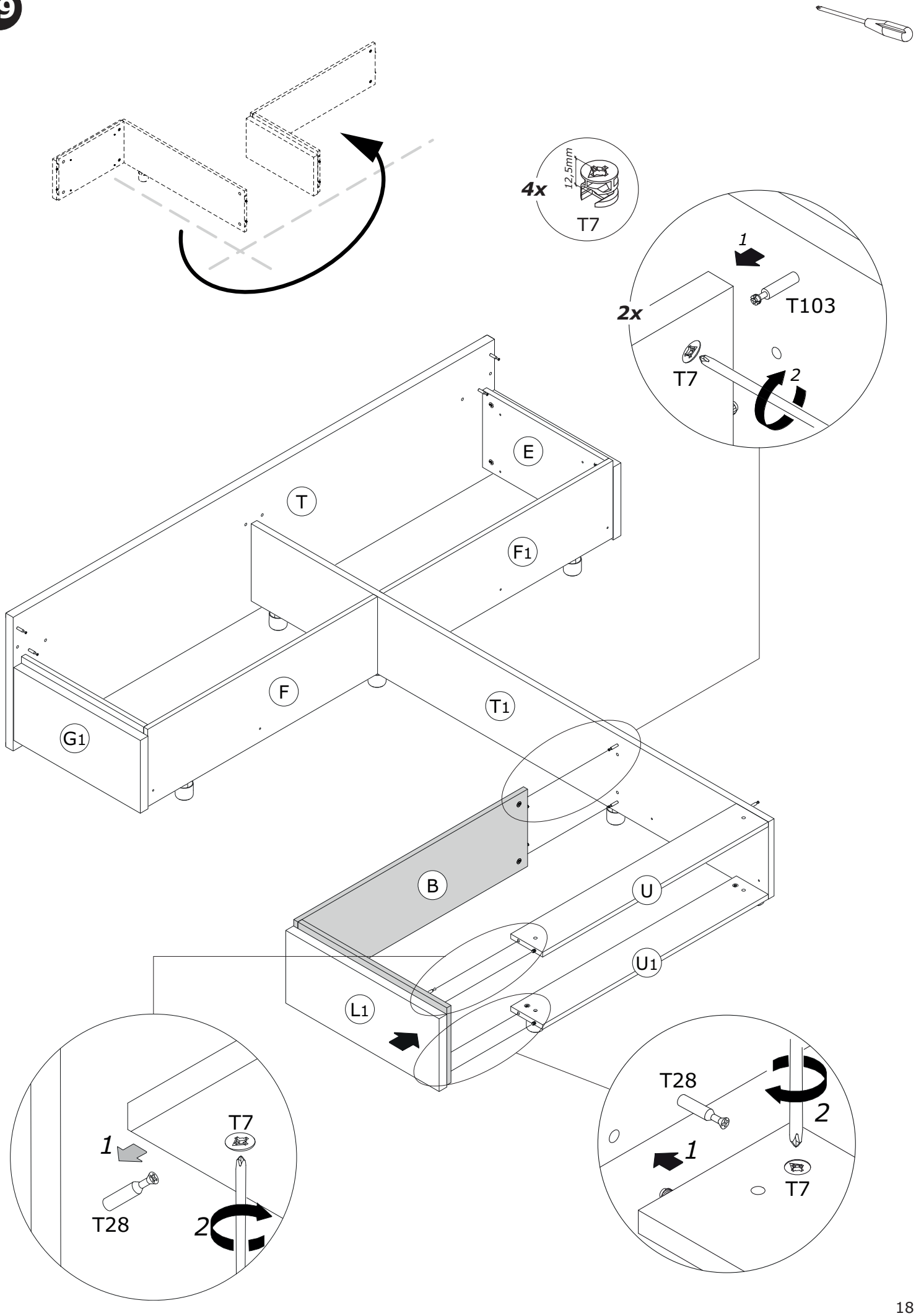

20

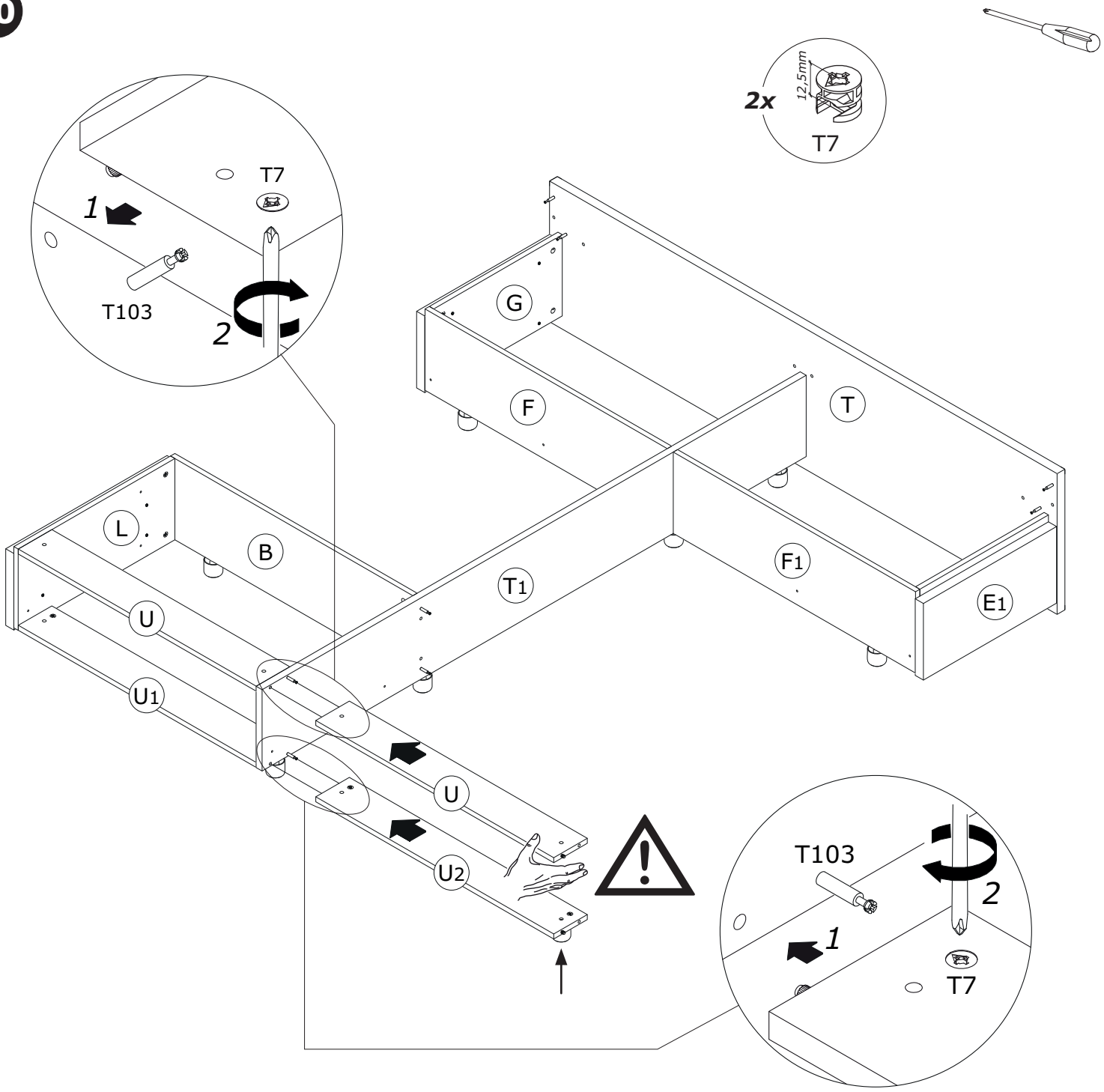
2x
12,5mm
T7
T7
1
T103
2
G
F
T
L
B
T1
F1
E1
U
U1
U
U2
T103
2
1
T7

21

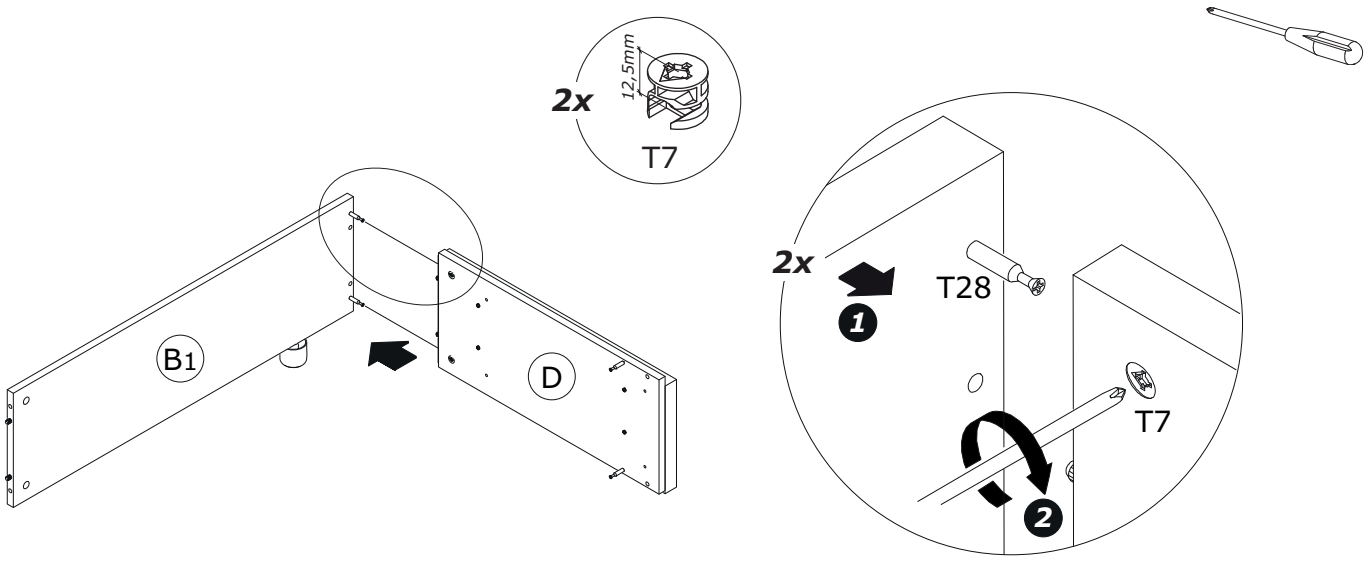
2x
12,5mm
T7
B1
D
2x
T28
1
T7
2

22

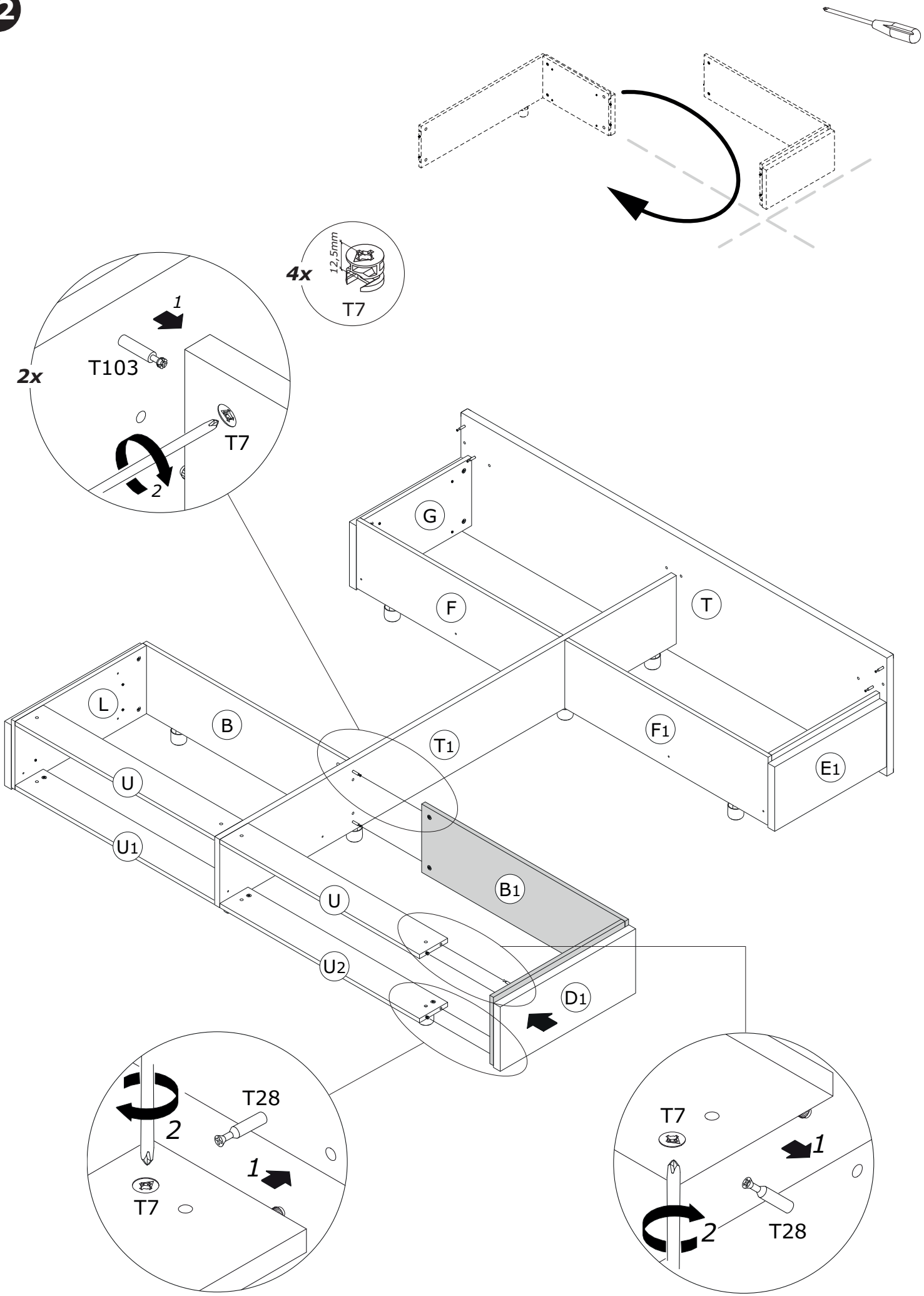
4x
12,5mm
T7
1
2x
T103
T7
2
G
F
T
L
B
T1
F1
E1
U
U1
B1
U
U2
D1
T28
2
1
T7
T7
1
2
T28

23

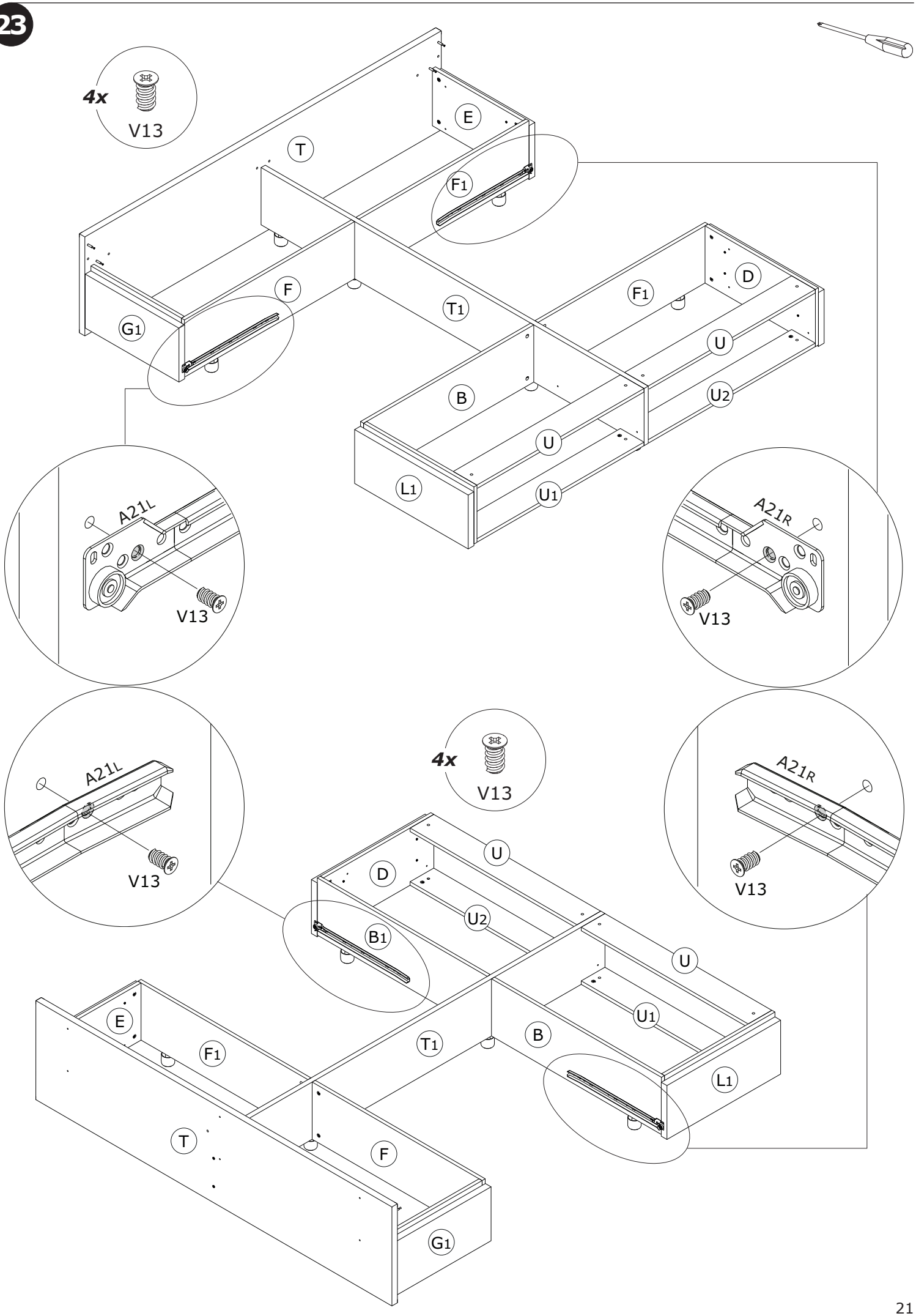
4x
V13
E
T
F1
D
F
F1
T1
G1
U
B
U2
U
L1
U1
A21L
V13
A21R
V13
A21L
V13
4x
V13
A21R
V13
U
D
U2
B1
U
E
U1
F1
T1
B
L1
T
F
G1

24

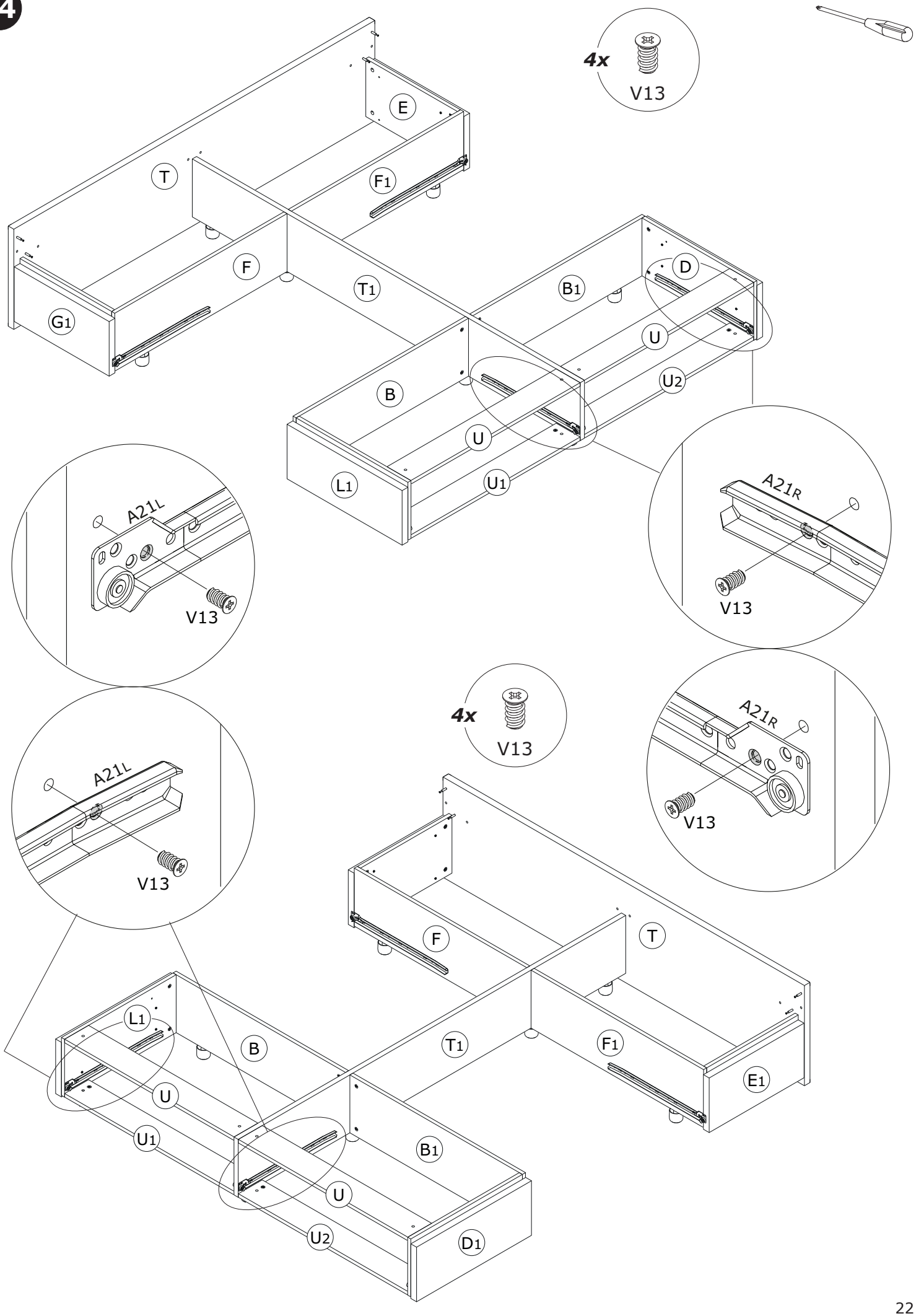
4x
V13
E
T
F1
F
T1
B1
D
G1
U
U2
B
U
L1
U1
A21L
V13
A21R
V13
4x
V13
A21R
V13
A21L
V13
F
T
L1
B
T1
F1
E1
U
U1
B1
U
U2
D1

25

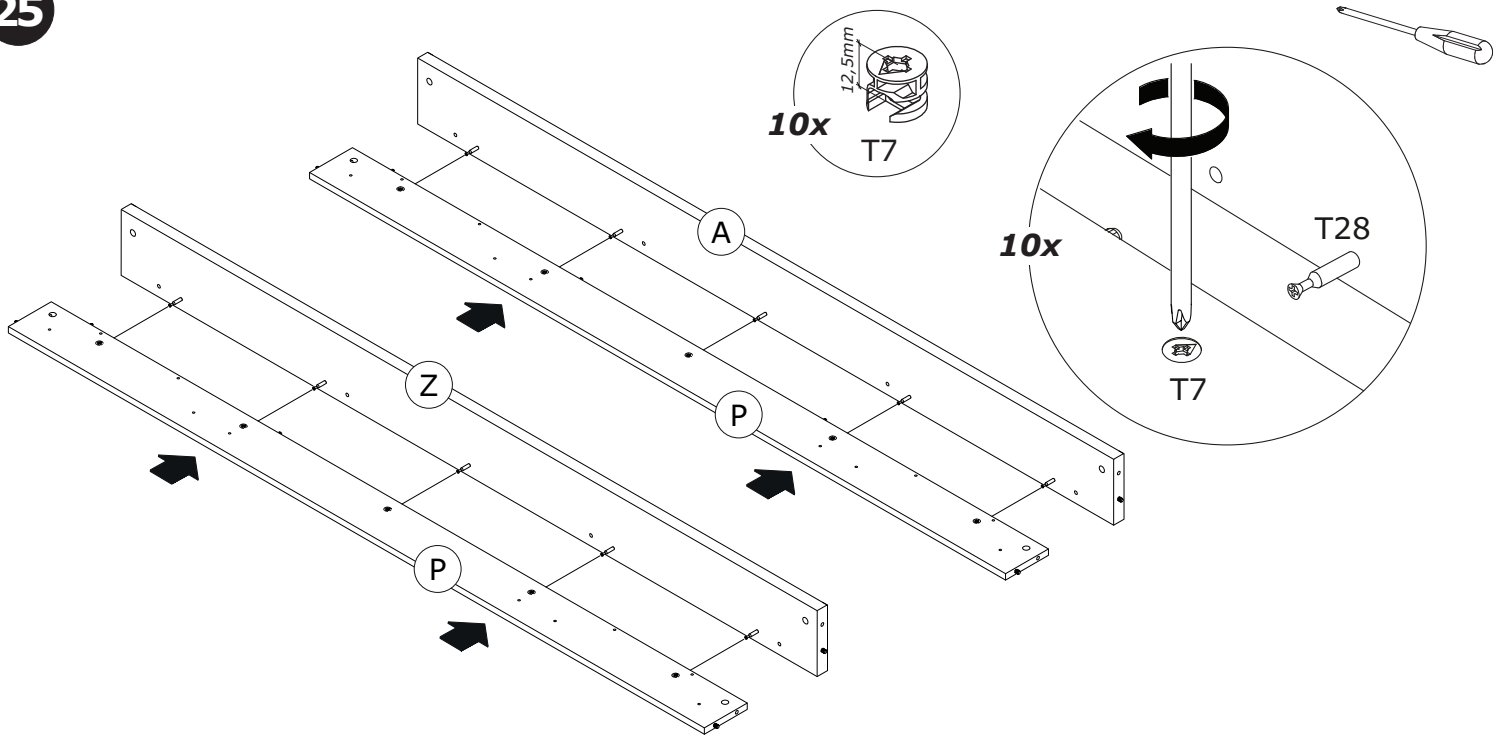
12,5mm
10x
T7
10x
T28
T7
A
Z
P
P

26

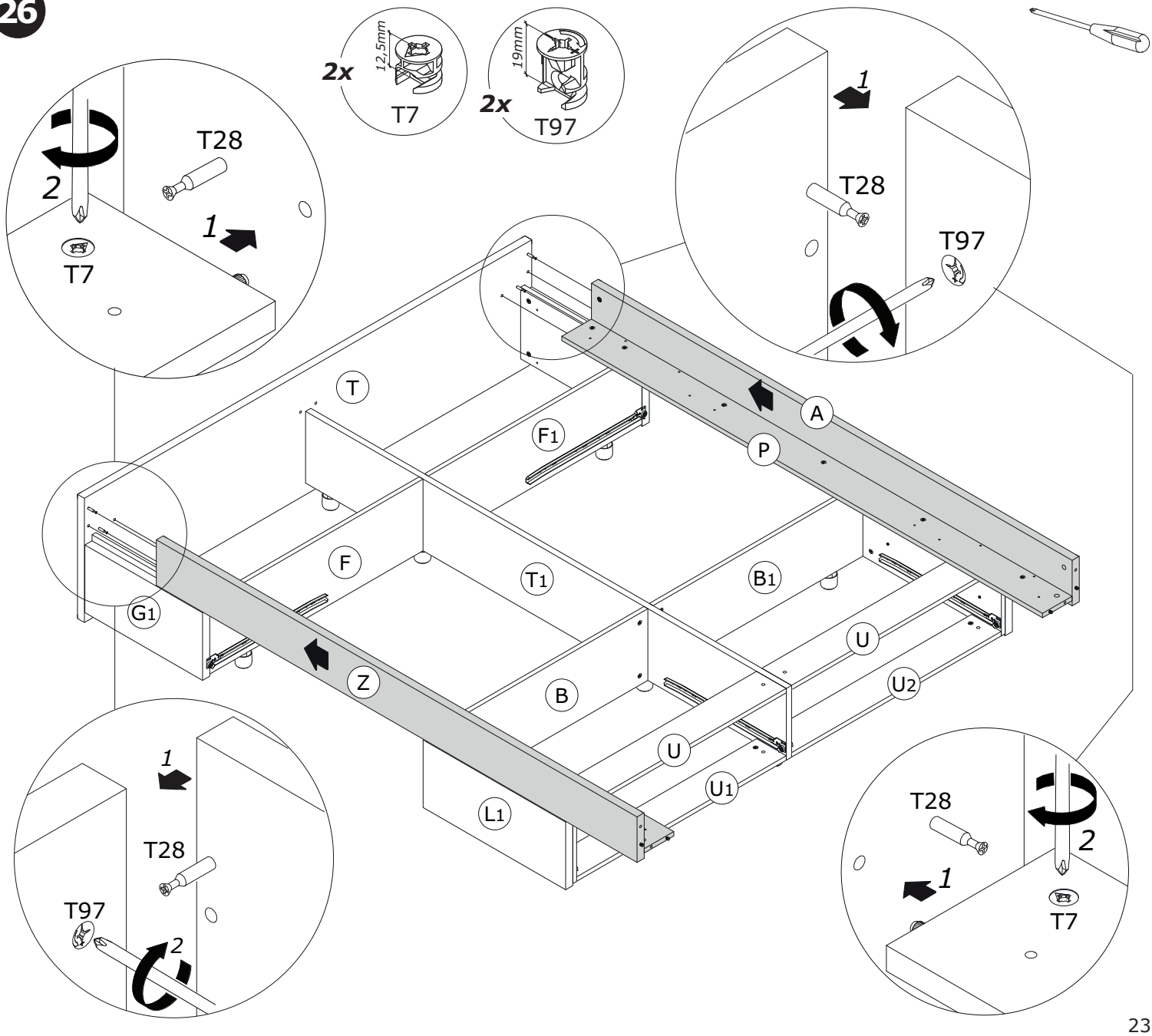
2x
12,5mm
T7
2x
19mm
T97
T28
2
1
T7
1
T28
T97
T
F1
A
P
F
T1
B1
G1
U
Z
B
U2
U
U1
L1
1
T28
T97
2
T28
2
1
T7

27

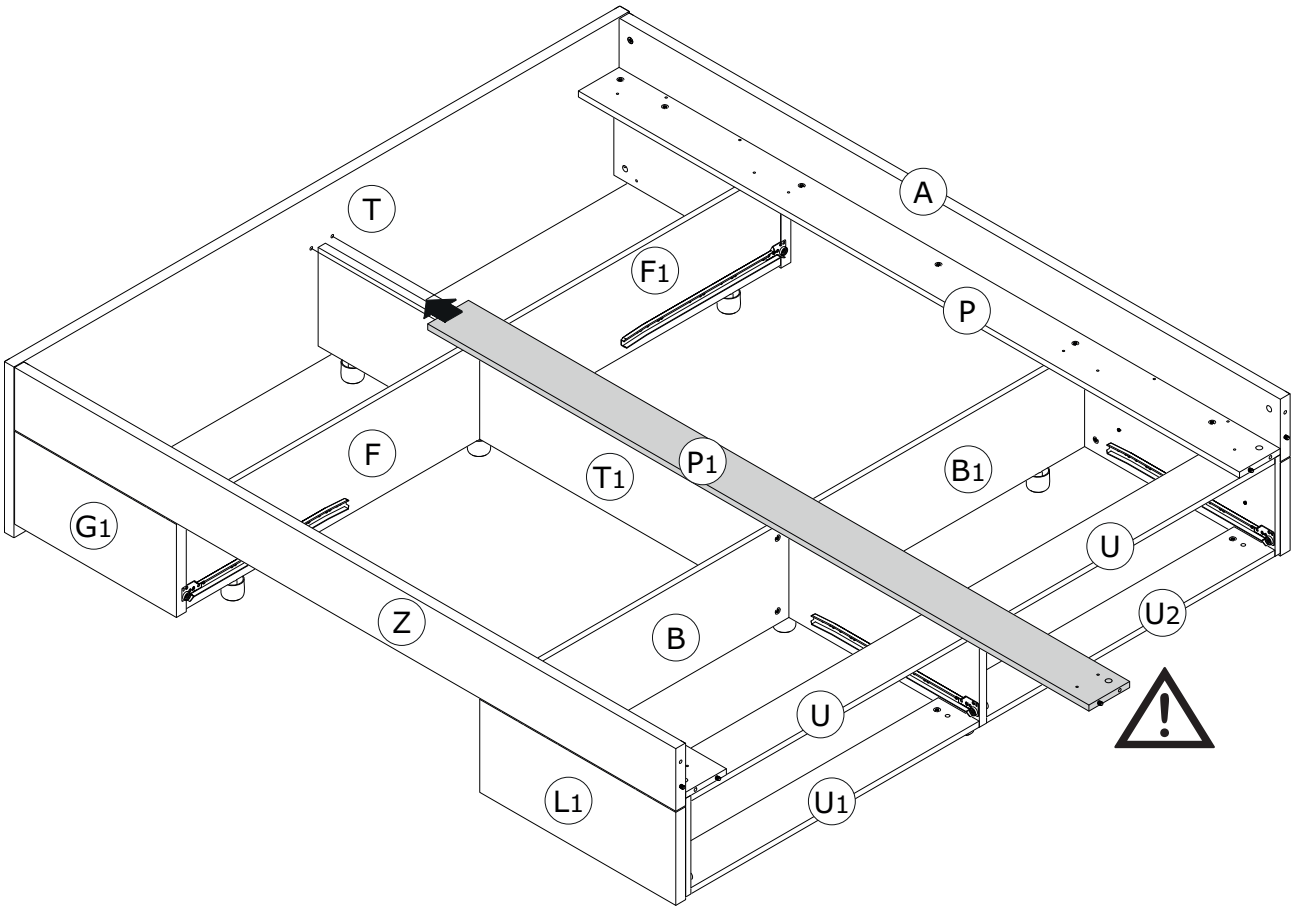
T
A
F1
P
F
T1
P1
B1
G1
U
Z
B
U2
U
L1
U1

28

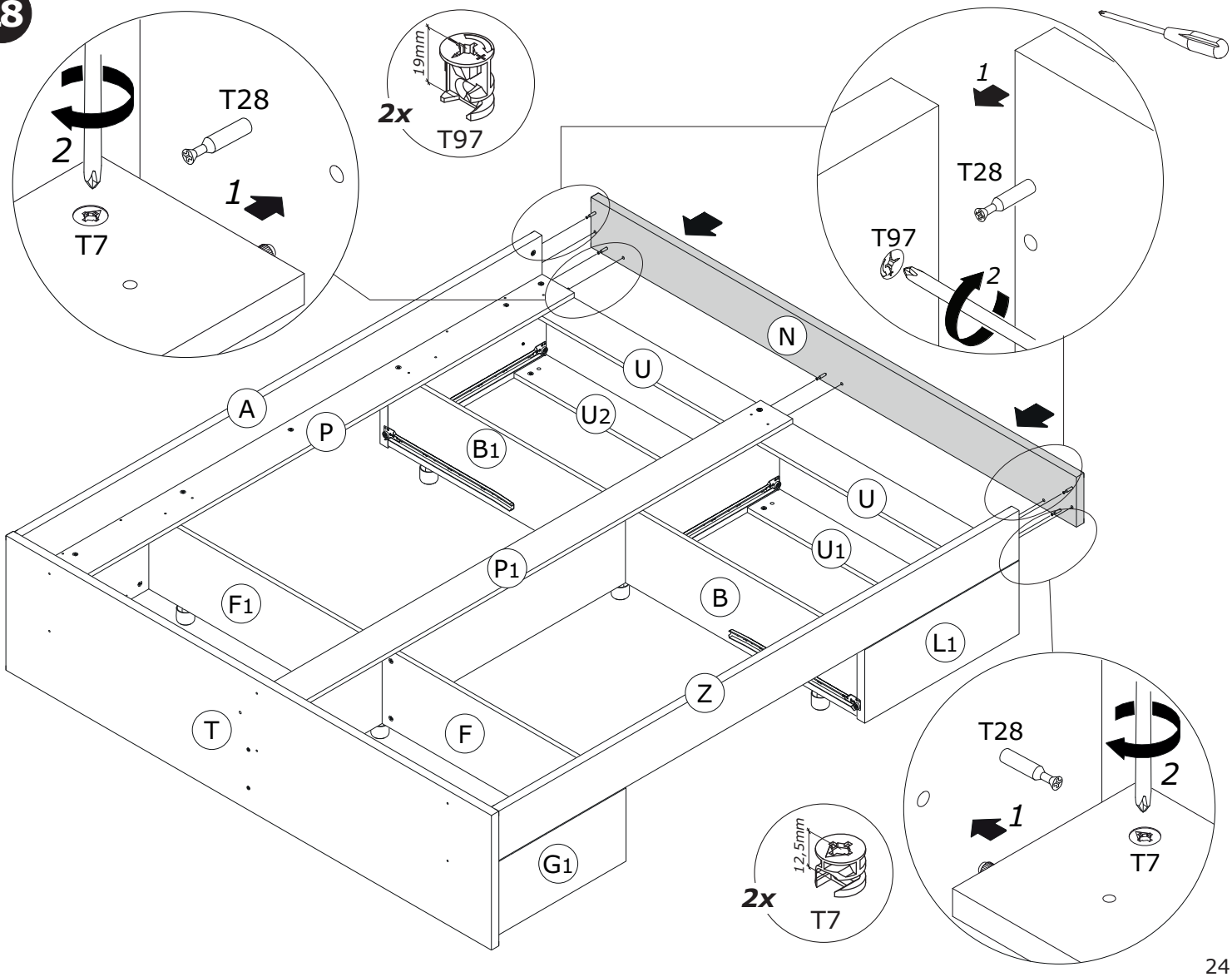
T28
2
1
T7
19mm
2x
T97
1
T28
T97
2
N
U
A
U2
P
B1
U
U1
P1
F1
B
L1
Z
T
F
G1
T28
2
1
T7
12,5mm
2x
T7

29

16x
V145
2
1x
12,5mm
T7
1
T7
A
P
B1
U
U2
N
U
U1
P1
B
F1
L1
T
F
Z
G1

30

A
P
B1
U
U2
N
U
U1
P1
B
F1
L1
T
Z
F
V57
G1

31

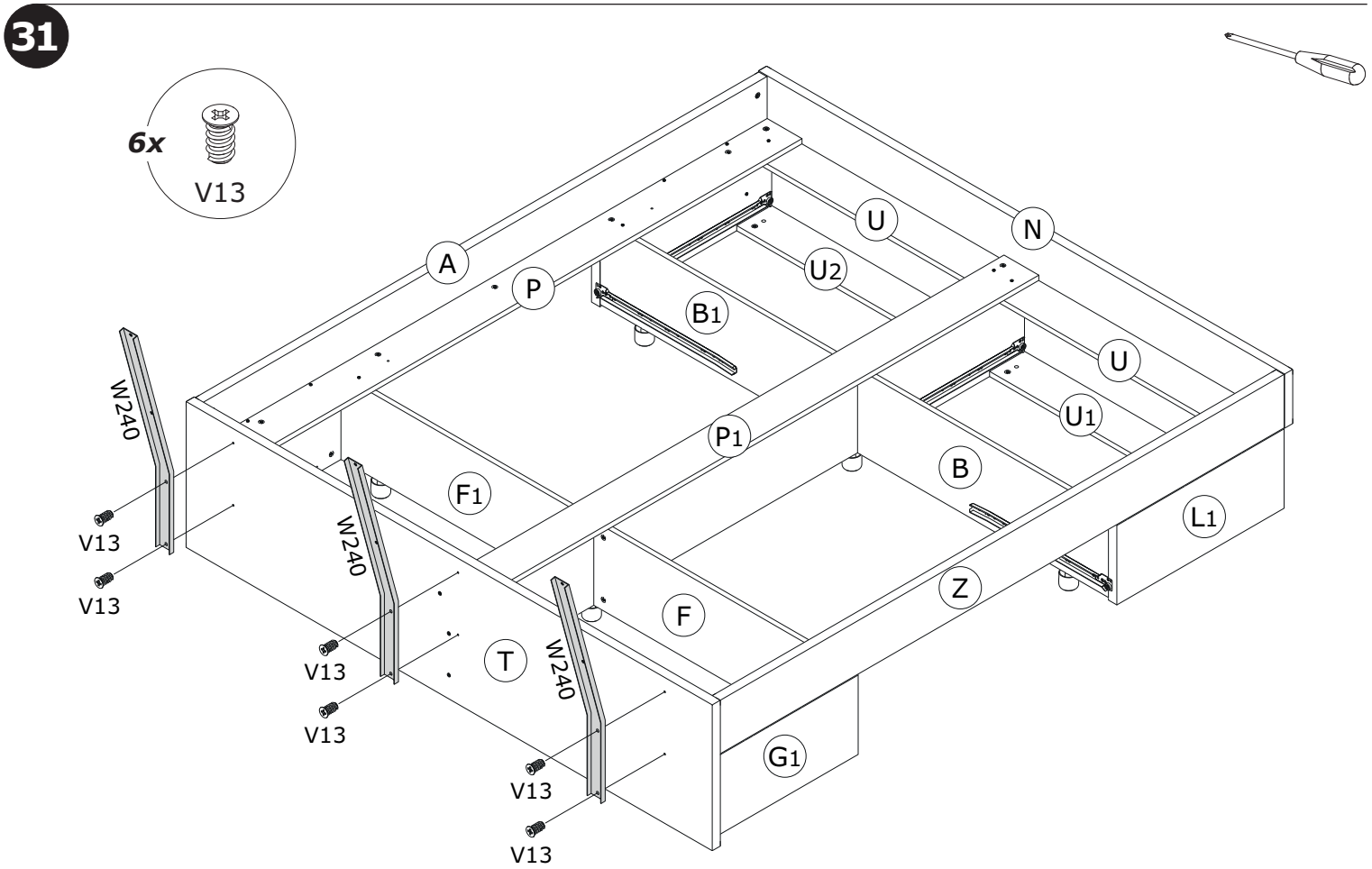
6x
V13
A
P
U
N
U2
B1
U
U1
P1
B
F1
L1
W240
V13
V13
W240
V13
V13
T
W240
F
Z
G1
V13
V13

32

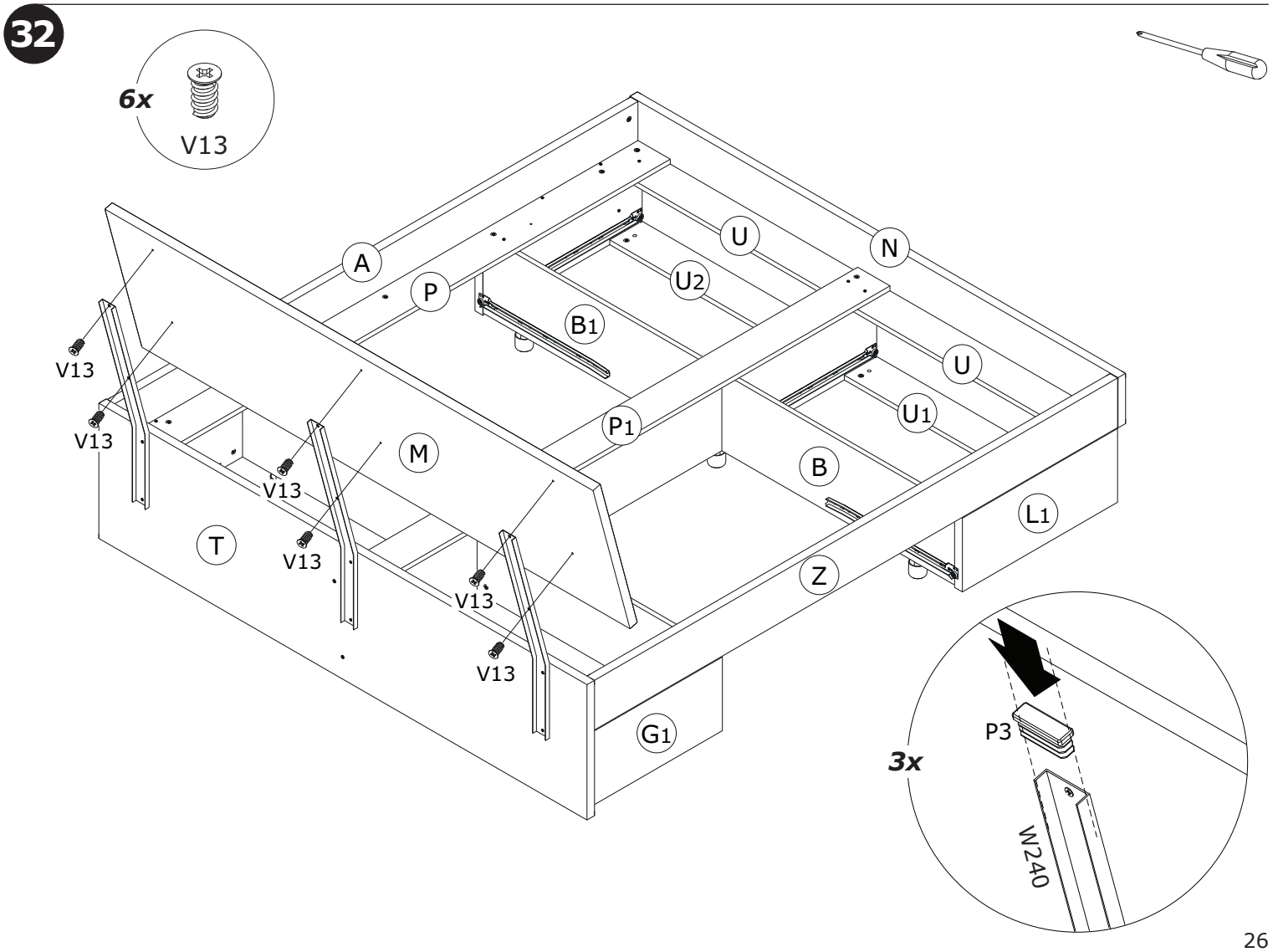
6x
V13
A
U
N
P
U2
B1
U
U1
P1
B
L1
V13
V13
M
V13
T
V13
V13
Z
V13
G1
3x
P3
W240